HONDA
POWER PRODUCTS

GENERAL PURPOSE ENGINE

GXV160UH2

PARTS CATALOGUE

1

13Z4P601

© Honda Motor Co., Ltd. 2005

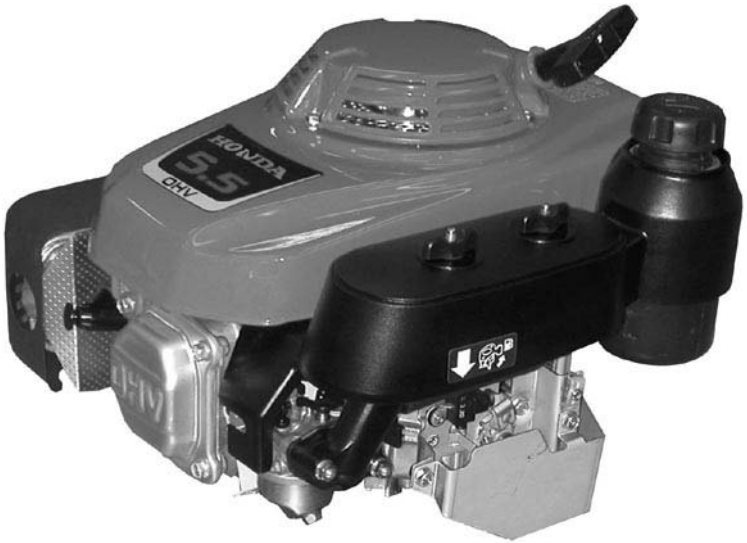

GXV160UH2

FOREWORD INDEX 1

ENGINE GROUP 2

PART NUMBER INDEX 3

PART NAME INDEX 4

Instruction for use of parts catalogue

- **This parts catalogue was prepared based on the latest information available as of July 20, 2005.**
  - See the parts catalogue news for any revision that is made after July 20, 2005.
- **Always specify the part number when ordering a part.**
  - Check the model, type, serial numbers, color, maker, and the size as needed before ordering a part.
  - Note that the illustrations (part drawings) can differ from the actual parts in shape.
    They are given just to help you to refer to the parts.
- **When modifications or additions to this parts catalogue are made, a revised edition will be issued at an appropriate time, with successively progressing revision numbers on the cover. We recommend obtaining such revisions in order to keep your parts catalogue up-to-date at all times. To check whether a parts catalogue revision has been issued, please contact your Honda distributor.**

Initial version issue date July 20, 2005
Honda Motor Co., Ltd.

CONTENTS

	Page	Address No.	
Instruction for use of parts catalogue	1	B 1	1
How to refer to the part information	2	B 2	
Part catalogue structure	3	B 3	
When the parts were revised	4	B 4	
Abbreviations used in the parts catalogue	4	B 4	
How to check the part block and serial numbers	5	B 5	
Models, parts catalogue codes and applicable serial numbers	6	B 6	
Features of each type	7	B 7	
Fuel hose, general purpose hoses and vinyl hose	8	B 8	
FLAT RATE SERVICE TIME	9	B 9	
Illustrated index	14	B14	
ENGINE GROUP	16	C 1	2
PART NO. INDEX	39	E 1	3
PART NAME INDEX	41	F 1	4

How to refer to the part information

Ⓐ Reference with “Illustrated index”

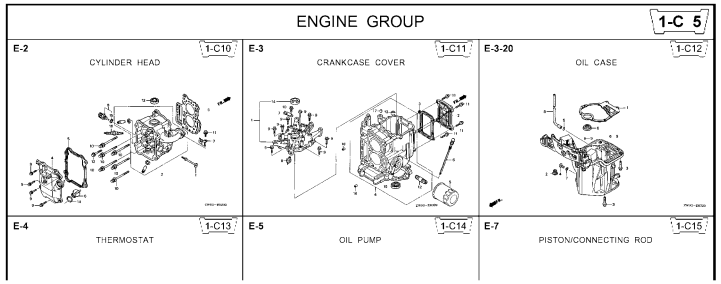

Ⓑ Reference with “Part number index”

PART NO. INDEX

Part Number	Address	Page	Ref.
06000			
06316-ZW9-000	1-G9	88	1
11000			
11300-ZW9-405	1-C11	27	1
11300-ZW9-406	1-C11	27	1
11340-ZW9-000	1-C11	27	2
11342-ZW9-000	1-C11	27	3
11381-ZW9-003	1-C12	28	1
12000			
12000-ZW9-405ZA	1-C11	27	4
12155-ZV4-A00	1-C13	29	1
12166-ZW9-000	1-C10	26	1
12209-GB4-681	1-C16	32	1
12210-ZW9-405ZA	1-C10	26	2
12216-ZE2-300	1-E8	55	1
	1-E11	58	1

Part Number	Address	Page
15212-ZW9-000	1-C14	3C
15220-ZW9-003	1-C14	3C
15332-ZW9-000	1-E8	55
15332-ZW9-A30	1-E11	58
15400-PFB-004	1-C11	27
15422-ZW9-000	1-C14	3C
15473-881-000	1-C14	3C
15474-ZW9-000	1-C14	3C
15611-921-000	1-C10	26
15655-ZW9-000	1-C11	27
16000		
16010-ZV4-005	1-D4	36
16011-ZV4-005	1-D4	36
16013-ZW9-003	1-D4	36
16016-ZW9-003	1-D4	36
16016-ZW9-721	1-D4	36
16023-ZW9-003	1-D4	36
16024-ZV4-650	1-D4	36
16028-ZV4-650	1-D4	36

Ⓒ Reference with “Part name index”

PART NAME INDEX

Part name	Address	Page	Ref.	
[A]				BOLT ,
ABSORBER ,FUEL	1-E15	62	5	
ARMATURE COMP.	1-D11	43	7	BOLT ,
ARM COMP. ,LINK JOINT	1-G6	85	18	BOLT ,
ARM COMP. ,SHIFT LINK	1-G6	85	14	BOLT ,
ARM COMP. ,TILT	1-F15	79	20	
ARM ,FUEL PUMP ROCKER	1-C16	32	4	
ARM ,REVERSE LOCK	1-F15	79	18	
ARM ,SHIFT LINK	1-F11	74	7	
ARM ,STOPPER	1-D1	33	12	BOLT ,
ARM ,THROTTLE REMOTE	1-F11	74	6	
ARM ,VALVE ROCKER	1-C16	32	3	
[B]				
BAG ,TOOL ,160MM	1-G5	84	10	
BAND	1-G6	86	37	
BAND B1,WIRE	1-F6	69	1	
BAND ,CORD	1-F3	67	18	BOLT ,
BAND ,TUBE CLIP ,11MM	1-E15	63	20	
BAND ,TUBE CLIP ,12.5MM	1-E15	63	19	BOLT ,

Address No.

E-2 CYLINDER HEAD 1-C10

Block No.

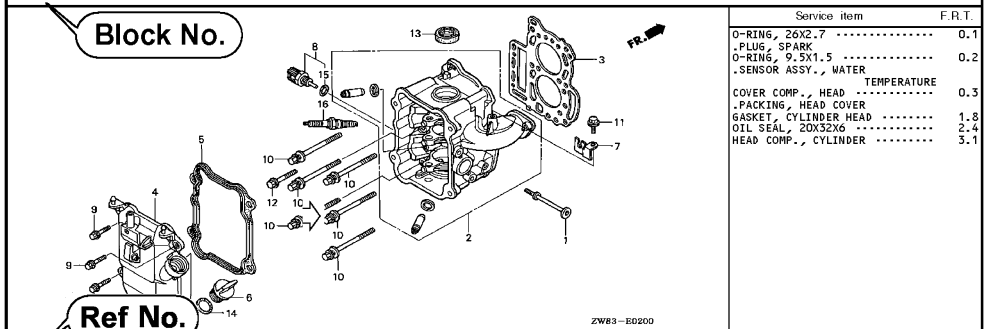

Ref No.

Service item	F.R.T.
O-RING, 26X2.7	0.1
.PLUG, SPARK	
O-RING, 9.5X1.5	0.2
.SENSOR ASSY., WATER TEMPERATURE	
COVER COMP., HEAD	0.3
.PACKING, HEAD COVER	
GASKET, CYLINDER HEAD	1.8
OIL SEAL, 20X32X6	2.4
HEAD COMP., CYLINDER	3.1

Ref. No.	Part No.	Description	Reqd. QTY BF 9.9D1	BFP 9.9D1	BF 10D1	BFP 10D1	BF 10B1	BFP 10B1	Serial No.	Parts catalogue code
1	12166-ZW9-000	STOPPER, ENGINE SIDE	2	2	2	2	2	2		
2	12210-ZW9-000ZA	HEAD COMP., CYLINDER *NH8*.....DARK GRAY	1	1	1	1	1	1		
3	12251-ZW9-003	GASKET, CYLINDER HEAD	1	1	1	1	1	1		
4	12310-ZW9-000	COVER COMP., HEAD	1	1	1	1	1	1		
5	12312-ZW9-000	PACKING, HEAD COVER	1	1	1	1	1	1		
6	15611-921-000	CAP, OIL (NO GAUGE)	1	1	1	1	1	1		
7	16617-ZW9-000	HOLDER, CABLE	1	1	1	1	1	1	-------- --------	SC,SG
	16617-ZW9-010		1	1	1	1	1	1	-------- 1001800	LHC,LHD
			1	1	1	1	1	1	1001801 --------	LHC,LHD
8	35673-ZW5-003	SENSOR ASSY., WATER TEMPERATURE	1	1	1	1	1	1		
9	90003-ZW9-000	BOLT, FLANGE, 6X22	4	4	4	4	4	4		
10	90007-ZW9-003	BOLT, FLANGE, 8X83	6	6	6	6	6	6		
11	90011-ZW9-000	BOLT, FLANGE, 6X14(CT200)	1	1	1	1	1	1		
12	90020-ZW9-000	BOLT, FLANGE, 8X40	2	2	2	2	2	2		
13	91202-KJ9-003	OIL SEAL, 20X32X6	1	1	1	1	1	1		
14	91301-805-000	O-RING, 26X2.7	1	1	1	1	1	1		
15	91307-PK2-005	O-RING, 9.5X1.5(HONDA KIKAKI)	1	1	1	1	1	1		
16	98059-55916	PLUG, SPARK (CR5EH-9)	2	2	2	2	2	2		
	98059-55926	PLUG, SPARK (U16FER9)	2	2	2	2	2	2		

44

2000.09.20 E

Page No.

Part catalogue structure

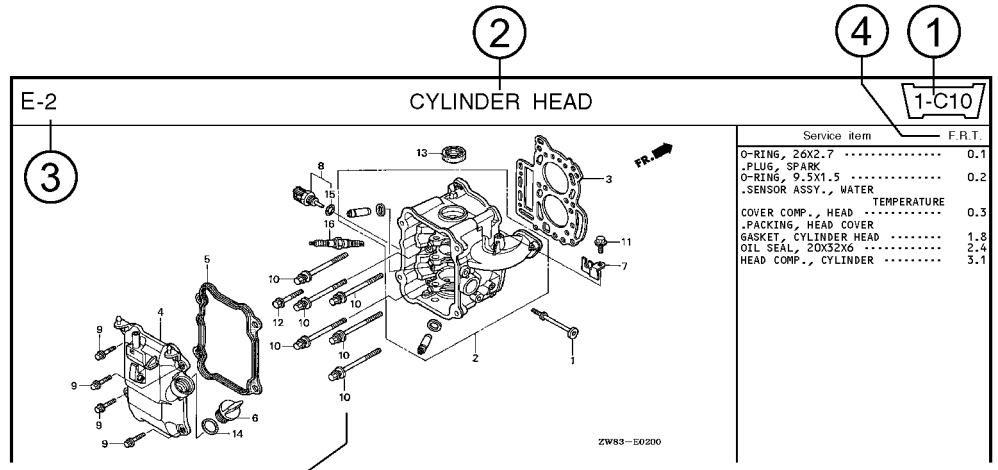

5 6 7 8 9 10 11 12 13 14

Ref. No.	Part No.	Description	Reqd. QTY BF 9.9D1	BFP 9.9D1	BF 10D1	BFP 10D1	BF 10B1	BFP 10B1	Serial No.	Parts catalogue code
1	12166-ZW9-000	STOPPER, ENGINE SIDE	2	2	2	2	2	2		
2	12210-ZW9-000ZA	HEAD COMP., CYLINDER *NH8*.....DARK GRAY	1	1	1	1	1	1		
3	12251-ZW9-003	GASKET, CYLINDER HEAD	1	1	1	1	1	1		
4	12310-ZW9-000	COVER COMP., HEAD	1	1	1	1	1	1		
5	12312-ZW9-000	PACKING, HEAD COVER	1	1	1	1	1	1		
6	15611-921-000	CAP, OIL ..... (NO GAUGE)	1	1	1	1	1	1		
7	16617-ZW9-000	HOLDER, CABLE	1	1	1	1	1	1	------- -------	SC,SG
	16617-ZW9-010	.....	1	1	1	1	1	1	------- 1001800	LHC,LHD

16 15 17

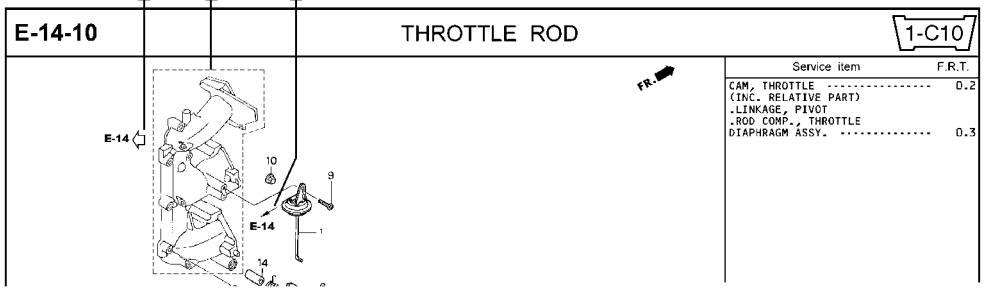

① Address number
- Address No. is provided (in place of the page No.) to help you refer to the part with the part No. or part name.

② Block title ③ Block number

④ Service item/Flat rate time

⑤ Reference number
- Title number marked with the parenthesis or parentheses indicates that it continues from the previous page.

⑥ Part number ⑦ Honda color code

⑧ Description

⑨ Assemblies
- Sections framed with broken lines in the exploded view drawings are available as complete assemblies. (Their individual parts can also be obtained.)

⑩ Color description

⑪ Note
- Notes are shown with the parentheses in the part name column.

⑫ Required quantity
- Required QTY shown in the parenthesis or parentheses indicates the optional part.
- Required QTY marked with “N” Indicates the optional part that should be selected as needed.
- Required QTY indicates the number of the part used in the block.

⑬ Serial number

⑭ Type
- When the type column is blank, it indicates that the part is applicable to all types.
- As the type of the actual unit may differ from the “parts catalogue, type” please refer to “Models, types and applicable serial numbers” for confirmation.

⑮
- Parts enclosed within a dotted line ⬚ are covered in a different block.

⑯ ⇦
- A hollow arrow ⇦ indicates the block No. for the parts enclosed within a dotted line ⬚ .

⑰ ←
- A solid arrow ← indicates the block No. the part in question is connected to.

When the parts were revised

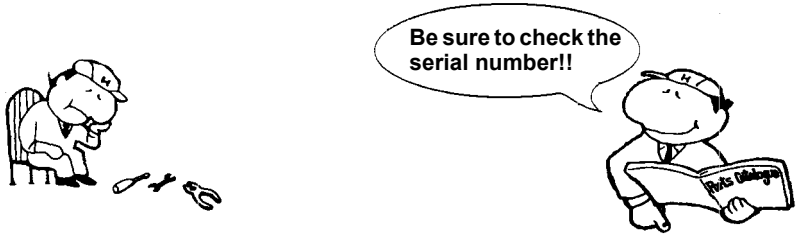

Ref. No.	Part No.	Description	Reqd. QTY BF 9.9D1	BFP 9.9D1	BF 10D1	BFP 10D1	BF 10B1	BFP 10B1	Serial No.
1	12166-ZW9-000	STOPPER, ENGINE SIDE ·····	2	2	2	2	2	2	
2	12210-ZW9-000ZA	HEAD COMP., CYLINDER							
		NH8.....DARK GRAY	1	1	1	1	1	1	
3	12251-ZW9-003	GASKET, CYLINDER HEAD ·····	1	1	1	1	1	1	
4	12310-ZW9-000	COVER COMP., HEAD ·····	1	1	1	1	1	1	
5	12312-ZW9-000	PACKING, HEAD COVER ·····	1	1	1	1	1	1	
6	15611-921-000	CAP, OIL ·····	1	1	1	1	1	1	
		(NO GAUGE)							
7	16617-ZW9-000	HOLDER, CABLE (###)·····	1	1	1	1	1	1	-------- -------- SC,SG
	16617-ZW9-010	·····	1	1	1	1	1	1	-------- 1001800 LHC,LHD
			1	1	1	1	1	1	1001801 -------- LHC,LHD

The number has been used from the initial model without revision.

When shown at the left side, it is applicable to the models of No.1001801 and the subsequent numbers.

When shown at the right side, it is applicable to the models up to No.1001800.

- The parts listed with "###" at the end of the parts name have limited supply period (parts not for sale).

Abbreviations used in the parts catalogue

- **The following abbreviations are used in the parts name column.**

A ..... Ampere
A.C. ..... Alternating current
ASSY. .... Assembly
AT. ..... Automatic transmission
C.D.I. ..... Capacitive discharge ignition
COMP. ... Complete
D.C. ..... Direct current
EX. ..... Exhaust
G.F.C.I ... Ground fault circuit interruptor
HEX. ..... Hexagonal
H.S.T. .... Hydrostatic transmission
FR. .....Front
IN. .....Inlet
L (100L) .Link (100 Links)
L. .....Left
MM .....Millimeter
MT. .....Manual Transmission
P.T.O. .....Power take off
R. .....Right
RR. .....Rear
STD. .....Standard
T (22T) ...Tooth (22 Teeth)
V .....Volt
W .....Watt

How to check the part block and serial numbers

Part block	Engine parts E-2~	Carburetor parts E-14
Numbers needed	Stamped engine number	Stamped carburetor identification number
Check point	①	②

②-Ⓑ
CARBURETOR IDENTIFICATION NUMBER

②-Ⓐ
CARBURETOR IDENTIFICATION NUMBER

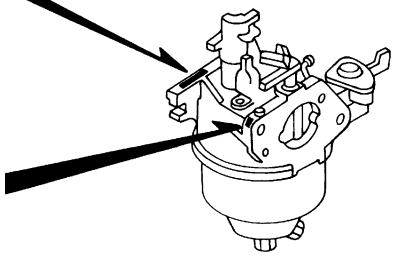

DZ1V-B

①
TYPE
ENGINE SERIAL NUMBER

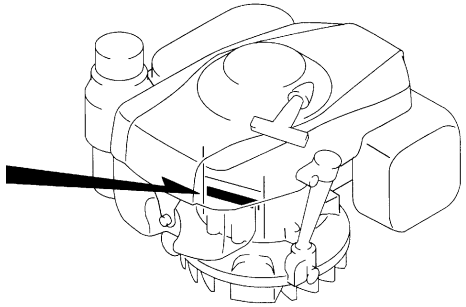

DZ1V-A

Models, parts catalogue codes and applicable serial numbers

- **Models, parts catalogue codes and applicable serial Nos. given in this parts catalogue can be identified as follows.**

Model	Type	Parts catalogue type	Applicable engine serial No.	Applicable carburetor identification No.
GXV160UH2	A1S	A1S	GJABH-1000001~	BE66J A
	A1SA	A1SA		
	A14	A14		
	N1	N1		
	N1F	N1F		
	N15	N15		
	N4	N4		
	N45	N45		
	N5M	N5M		BE66M A
	N55	N55		BE66J A
	SFL	SFL		
	SFL1	SFL1		
	SFY	SFY		
	SFY1	SFY1		
	T1AH	T1AH		

* Of carburetor identification numbers, only the portions underlined in the example below are used for registration.

BE 66J A KC ナ
Ⓐ Ⓑ

Features of each type

- **See the following table for the features of each type. (Items in brackets are optional)**

Specifications	Model / Type	GXV160UH2														
		A1S	A1SA	A14	N1	N1F	N15	N4	N45	N5M	N55	SFL	SFL1	SFY	SFY1	T1AH
Crankshaft	22.2mmØ Straight	●	●	●	●	●	●									
	25.4mmØ Straight (Flat key-way)							●	●							
	25.4mmØ Straight										●					
	20mmØ Steped thread											●	●	●	●	
	5/8" Stepped thread															●
	M8 Tapered									●						
Flywheel brake		●	●	●												

Fuel hose, general purpose hoses and vinyl hose

- The standard part fuel hose, general purpose hose and vinyl hose may be substituted by the coiled bulk part.
- When ordering the standard part fuel hose, general purpose hose and vinyl hose use the bulk part number written in the parts catalog in brackets ( ) underneath the part name.
- When exchanging the hose, cut and use at the specified length as mentioned in the part name.
  (For the method of cutting the bulk part, and method of filling out orders etc., please refer to the instructions issued with the bulk part.)

Bulk part number of fuel hose, general purpose hose and vinyl hose.

Example: 9 5 0 0 1 - 7 5 0 0 1 - 5 0 M

Bulk part number:
Refers to the bulk part.

Marking code (fuel hose and general purpose hose)
Change code (Vinyl hose)
Indicates number mark or change sequence, however, the code for the bulk part must be strictly 0 (zero).

Types of code:

- Fuel hose
  - 2: Red outside braid (3 mm inside dia. only)
  - 5: Black inside braid
  - 3: Red (3 mm inside dia. only)
  - 4: Ash gray with red stripe (3 mm inside dia. only)
  - 6: Black
- General hose
  - 1: Ash gray
  - 2: Ash gray
  - 3: Black
  - 5: Black
- Vinyl hose
  - 1: Clear
  - 2: Black
  - 3: Light red
  - 6: Light red
  - 7: Pale black

Lengths:
001: 1 m (standard)
003: 3 m
008: 8 m
} Application or specification of some parts is not settled.

I.D code: (fuel hose and general purpose hose)

30: 3.0 mm	50: 5.0 mm	70: 7.0 mm	11: 11 mm	12: 12 (outside dia. 17) mm
35: 3.5 mm	55: 5.3 mm, 5.5 mm	75: 7.3 mm, 7.5 mm	91: 12 (outside dia. 15) mm	14: 14 mm
45: 4.5 mm	65: 6.5 mm	80: 8.0 mm	92: 12 (outside dia. 16) mm	17: 17 mm

ID./OD. code: (vinyl hose)

01: ID. 2.9, OD. 6.8 mm	12: ID. 5.0, OD. 7.0 mm	21: ID. 8.0, OD. 9.0 mm	37: ID. 11.0, OD. 15.0 mm	50: ID. 16.0, OD. 19.0 mm
03: ID. 3.0, OD. 6.0 mm	10: ID. 5.0, OD. 8.0 mm	23: ID. 8.0, OD. 12.0 mm	38: ID. 12.0, OD. 13.0 mm	55: ID. 17.5, OD. 20.5 mm
05: ID. 3.5, OD. 6.5 mm	11: ID. 5.0, OD. 9.0 mm	25: ID. 9.0, OD. 11.0 mm	39: ID. 12.0, OD. 14.0 mm	60: ID. 22.0, OD. 27.0 mm
07: ID. 4.0, OD. 7.0 mm	14: ID. 6.0, OD. 9.0 mm	27: ID. 9.0, OD. 13.0 mm	40: ID. 12.0, OD. 16.0 mm	
08: ID. 4.5, OD. 6.5 mm	17: ID. 7.0, OD. 9.0 mm	33: ID. 10.0, OD. 14.0 mm	43: ID. 13.0, OD. 15.0 mm	
09: ID. 4.5, OD. 8.0 mm	19: ID. 7.0, OD. 11.0 mm	36: ID. 11.0, OD. 13.0 mm	45: ID. 14.0, OD. 18.0 mm	

Hose type:
1: Fuel hose
3: Vinyl hose
5: General hose

◎ **CAUTION: It is DANGEROUS to confuse the fuel hose with the general purpose hose or vinyl hose.**
Never use a general purpose hose or vinyl hose in place of a fuel hose or vice versa. Always use the correct bulk part in the parts catalogue, according to the service manual or the instructions issued with the bulk part.

FLAT RATE SERVICE TIME

Flat rate service time (FRT) means the standard time required to service a product, which is listed in this manual to help the dealers control the actual working process and calculate the service charge by using it as a guide.

FRT setting system

- Net service time
  - Removal, Disassembly/reassembly, Installation
  - Inspection, Measurement, Adjustment, Confirmation
  - Diagnosis/troubleshooting (Electric system)
  - Completion inspection
- Float time
  - Preparation (Process check, Confirmation arrangement for necessary tools)
  - Related work (Transfer of products)

* Float time is set by multiplying the net service time by a given coefficient.

Editorial style

The service items shown in the text are listed with the exchange work time for the repair sales parts as the subject. Other representative service items not using repair parts (removal/installation, adjustment, inspection/measuring, and other work) are listed collectively in the list in the preface, classified according to the work.

FRT setting standard

- Decimal system (in unit of 0.1) is adopted to set FRT as it is convenient to calculate the wage.
  Example: (0.1) → 6 minutes, (0.2) → 12 minutes
  [Labor cost per hour] x [FRT] = [Wage]
- FRT is set with a hand tool.
- Service items and FRT can be subject to change depending on development of tools and service equipment and improvement in service procedure.

Work procedure

- As the work procedure is set with the work time according to the method in the separate Service Manual, refer to this Manual as required.
- Work methods permitting servicing in the shortest time still permitting assurance of safe work and product warranty are used for the setting of service items not listed in the Service Manual.
- Work basically is to be performed by one person, and when two or more people are required, setting is done as the total time for the number of people.
- The set value for the technological level of the workers uses a person with three years of experience in the repair of Honda products as the standard.
- Special tools and service equipment used to set FRT are those specified or recommended in Service Manual.

Service item whose FRT is not presented

- Accessories and service parts that are not listed to use in this manual.
- Locations with little aging deterioration or breakage during normal use.
- Service work that can be finished by one touch.
- Service work that is seldom done (i.e. extremely small causes of trouble and service frequency).
- Products and parts whose location for installation differs according to its status of use and application.

* When FRT is not presented, please calculate wages based on appropriate actual work time.

Operation not included of FRT

- Oil and coolant water drainig, Waiting time for warming up operation and etc..
- Additional operation that involves removal/installation of standard exterior equipment.
- Indirect time spent for service by visiting the customer, trade-in, and delivery.
- Indirect time required for ordering and delivery of parts.
- Cost for grease, adhesive agent, etc. used for service work.

Explanation of FRT by using an example
(The example may differ from the actual presented items)

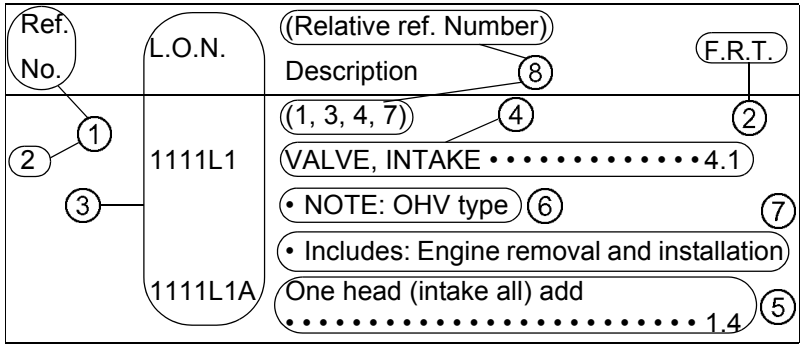

① Reference No. of the illustration of part that shows location of the replacement work.

② FRT is an abbreviation of Flat Rate Time indicating the standard service time required for the replacement.

③ LON is an abbreviation of Labor Operation Number, and it is a classification of the service items by the work unit code.

The same operation code is used regardless of the models.

Standard operation is indicated with 6 digits code, and additional operation is indicated with 7 digits code.

④ Indicating the intake valve replacement and FRT4.1.

⑤ Indicating FRT1.4 that will be added when additional operation (whole intake side of one cylinder head) is done in association with intake valve replacement.

⑥ Indicating work condition or application condition of the service item.

⑦ Indicating work contents that are included in the service item.

⑧ Indicating a reference No. whose operation and time are the same as FRT4.1 for the intake valve.

(The application range is limited to the service items without an LON setting within a same block.)

How to refer to the service item by using the sample
(intake valve replacement)

Open to the page of the block where the intake valve's spare part illustration is shown.

Look for the intake valve illustration, and refer to the service item and FRT that agree with the reference No.

Indication mark for the listing of service items that continues to the following page

Ref. No.	L.O.N.	(Relative ref. Number) Description	F.R.T.
2	**1111L1**	**VALVE, INTAKE** • • • • • • • • • • • •	**4.1**
	•	•	•
	•	•	•
+			

Mark indicated at the last line.

Indication of the block with no setting of FRT

Ref. No.	L.O.N.	(Relative ref. Number) Description	F.R.T.
NO INFORMATION •			

- **LON code system**

1	11	1	L1	A
a	b	c	d	e

a) Category code..... Engine
b) Location/function code..... Engine upper
c) Operation code..... Replace
d) Operation sequence number (Unit code can be shown with alphabet)
..... Intake valve
(No regular rule of code)
e) Additional code ..... One head (intake all)
(No regular rule of code)

1	11	1	L1	A
a		c		

a) Category codes and classification

Code	Category
1	Engine
2	Power drive
3	Fuel & Exhaust
4	Frame & Body
5	Steering
6	Electrical
7	Axle & Brake
8	Control system
9	-
0	Attachments

c) Operation codes and classification

Code	Operation category
1	Replace, Removal/Installation, Change
2	Overhaul
3	Adjust, Rotation
4	(Paint-related work: Top-coat)
5	Test, Inspect/diagnose, Measurment
6	(Overhaul-related work: Rebore)
7	(Overhaul-related work: Reseal)
8	(Resurface)
9	(Paint-related work: Refinish)
0	Repair, Cleaning, Air bleeding

Major service items without using spare parts
(1) Removal/Installation, (2) Adjustment, (3) Inspection/ Measurement, (4) Overhaul, (5) Other work

E: Engine, T: Transmission, D: Drive system, B: Body and related parts

(1) Removal/Installation

Set with the parts configuration in the status of being removed from the product.

	LON	DESCRIPTION	FRT
E	1111L3	**CYLINDER HEAD ASSEMBLY-REMOVAL/INSTALLATION**	0.6

(2) Adjustment

	LON	DESCRIPTION	FRT
E	1113A1	**VALVE CLEARANCE-ADJUSTMENT** NOTE: For 1 product	0.4
	1163A0	**CONTROL, THROTTLE/GOVERNOR-ADJUSTMENT**	0.2
	3113A2	**CARBURETOR IDLE-ADJUSTMENT**	0.1

(3) Inspection, Measurement, Cleaning

	LON	DESCRIPTION	FRT
E	1105A0	**ENGINE OIL-INSPECTION**	0.1
	3120A0	**AIR CLEANER-CLEANING** INCLUDES: Air cleaner-inspection	0.2
	3130A0	**SPARK ARRESTER-CLEANING**	0.2
	6140A0	**SPARK PLUG-ADJUSTMENT/CLEANING** NOTE: For 1 product	0.1

(4) Overhaul

Work condition: The required Measurements, inspections, adjustments, and cleaning/washing of each part are performed, including the main body removal/installation work and the replacement of defective parts.

	LON	DESCRIPTION	FRT
E	3112A0	**CARBURETOR-OVERHAUL** INCLUDES: All necessary adjustment	0.6

(5) Other work

	LON	DESCRIPTION	FRT
E	1101E1	**ENGINE OIL-CHANGE** INCLUDES: Engine oil-inspection	0.1

E-2 C 1

CYLINDER HEAD

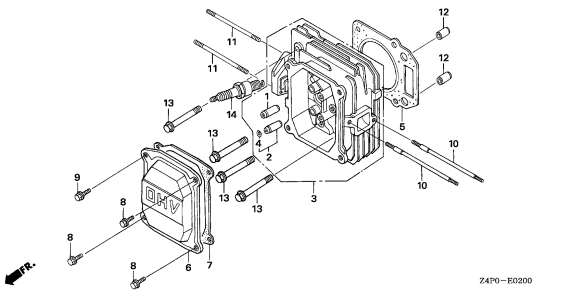

E-3 C 2

CYLINDER BARREL

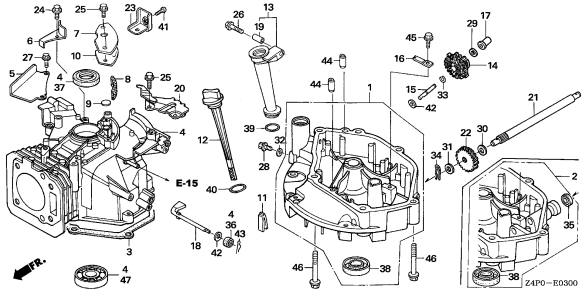

E-7 C 5

CRANKSHAFT/PISTON

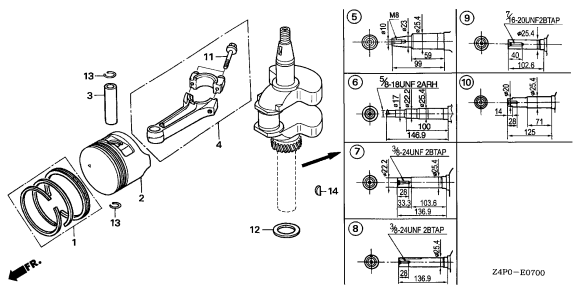

E-9 C 7

CAMSHAFT

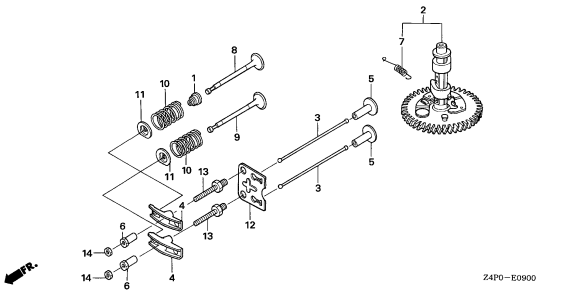

E-11 C10

RECOIL STARTER

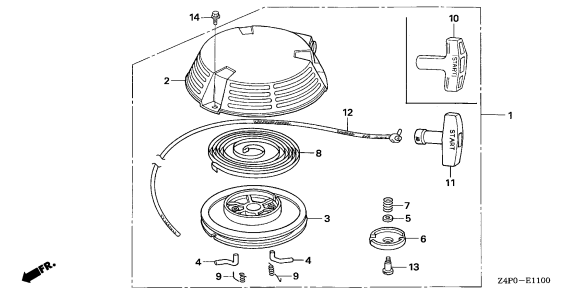

E-12 C11

FAN COVER

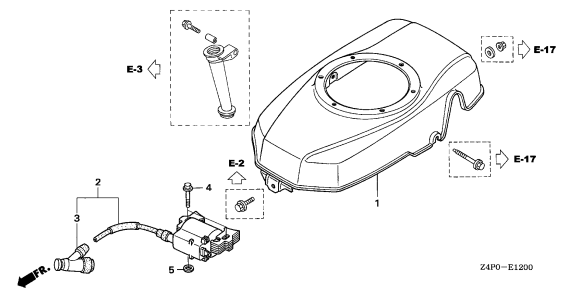

E-14 C12

CARBURETOR

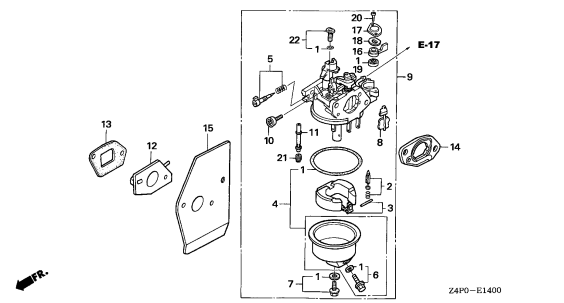

E-15 C14

AIR CLEANER

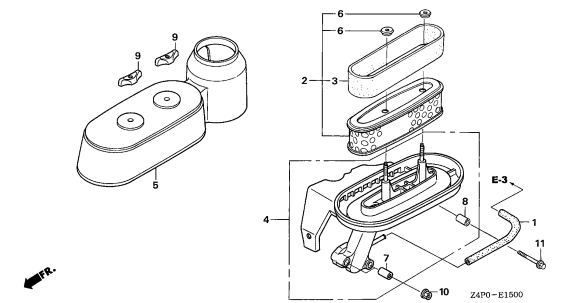

E-16 C15

MUFFLER

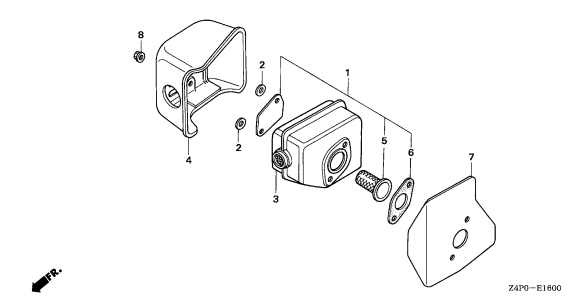

E-17 C16

FUEL TANK

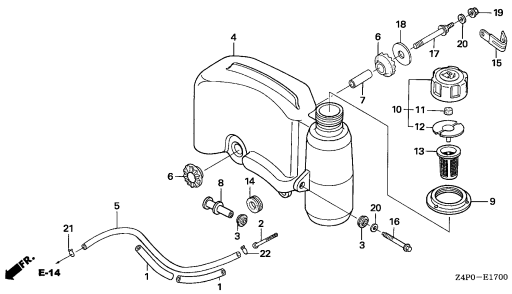

E-19 D 1

FLYWHEEL(1)

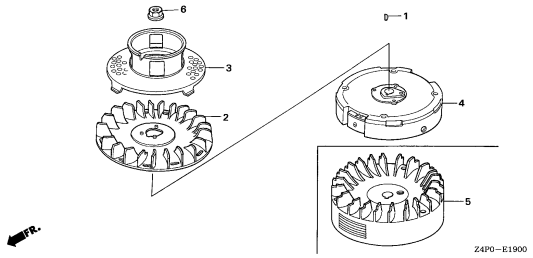

E-19-1 D 2

FLYWHEEL(2)

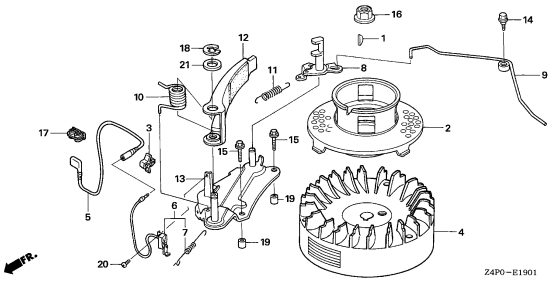

E-22 D 3

CONTROL(1)

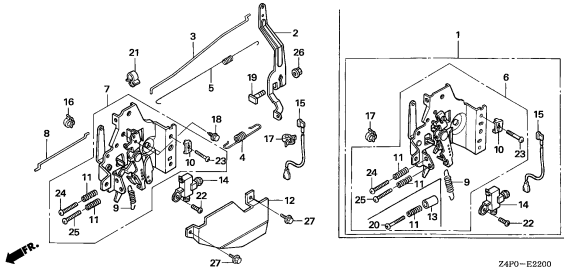

E-22-1 D 5

CONTROL(2)

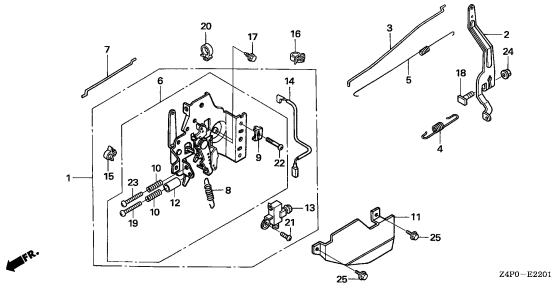

E-28 D 6

LABEL/TOOL

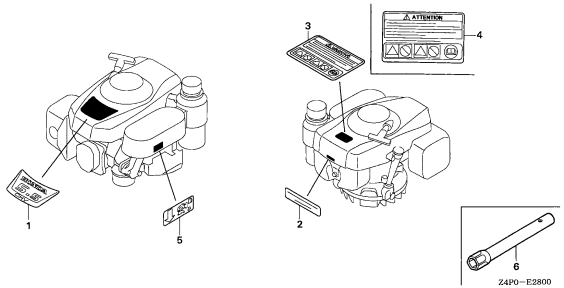

E-40 D 7

BLADE HOLDER

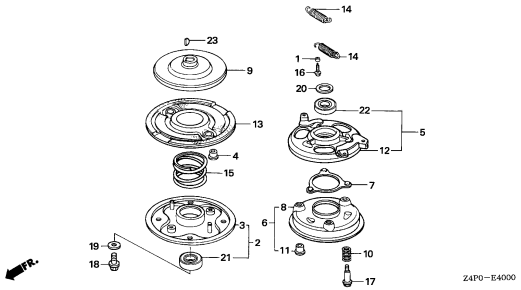

2

CYLINDER HEAD

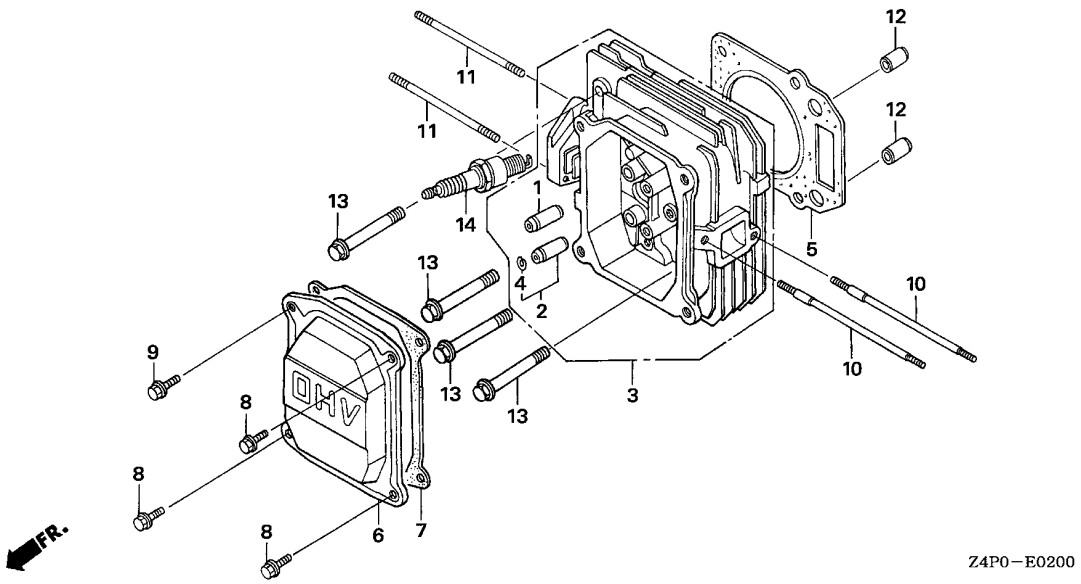

Ref. No.	L.O.N.	(Relative ref. Number) Description	F.R.T.
1	1111E9	GUIDE, INTAKE VALVE	0.8
		.INCLUDES: Valve clearance adjustment	
	1111E9E	.Replace intake and exhaust all add	0.2
2	1111E8	GUIDE, EXHAUST VALVE	0.8
		.INCLUDES: Valve clearance adjustment	
	1111E8E	.Replace intake and exhaust all add	0.2
3	1111N3	HEAD, CYLINDER	1.0
		.INCLUDES: Valve clearance adjustment and reface	
5	1111N4	GASKET, CYLINDER HEAD	0.6
6		(7)	
	1111D5	COVER, CYLINDER HEAD AND/OR PACKING, HEAD COVER	0.1
14	6141C1	PLUG, SPARK	0.1
		.INCLUDES: Spark plug check	

Ref. No.	Part No.	Description	Reqd. QTY GXV 160 UH2	Serial No.	Parts catalogue code
1	12204-ZE1-306	GUIDE, IN. VALVE (O.S.)	(1)		
2	12205-ZE1-315	GUIDE, EX. VALVE (O.S.)	(1)		
3	12210-Z1V-000	HEAD COMP., CYLINDER	1		
4	12216-ZE5-300	CLIP, VALVE GUIDE	1		
5	12251-ZE7-000	GASKET, CYLINDER HEAD	1		
6	12311-ZG9-800	COVER, HEAD	1		
7	12391-ZE7-M10	PACKING, HEAD COVER	1		
8	90013-883-000	BOLT, FLANGE, 6X12(CT200) ...	3		
9	90014-952-000	BOLT, FLANGE, 6X14(CT200) ...	1		
10	90043-ZE6-000	BOLT, STUD, 6X109	2		
11	90048-ZC3-000	BOLT, STUD, 6X85	2		
12	94301-10160	DOWEL PIN, 10X16	2		
13	95701-08050-00	BOLT, FLANGE, 8X50	4		
14	98079-54846	PLUG, SPARK (BPR4ES)(NGK) ...	(1)		
	98079-54855	PLUG, SPARK (W14EPR-U)(DENSO)	(1)		
	98079-55846	PLUG, SPARK (BPR5ES)(NGK) ...	1		
	98079-55855	PLUG, SPARK (W16EPR-U)(DENSO)	1		
	98079-56846	PLUG, SPARK (BPR6ES)(NGK) ...	(1)		
	98079-56855	PLUG, SPARK (W20EPR-U)(DENSO)	(1)		

CYLINDER BARREL

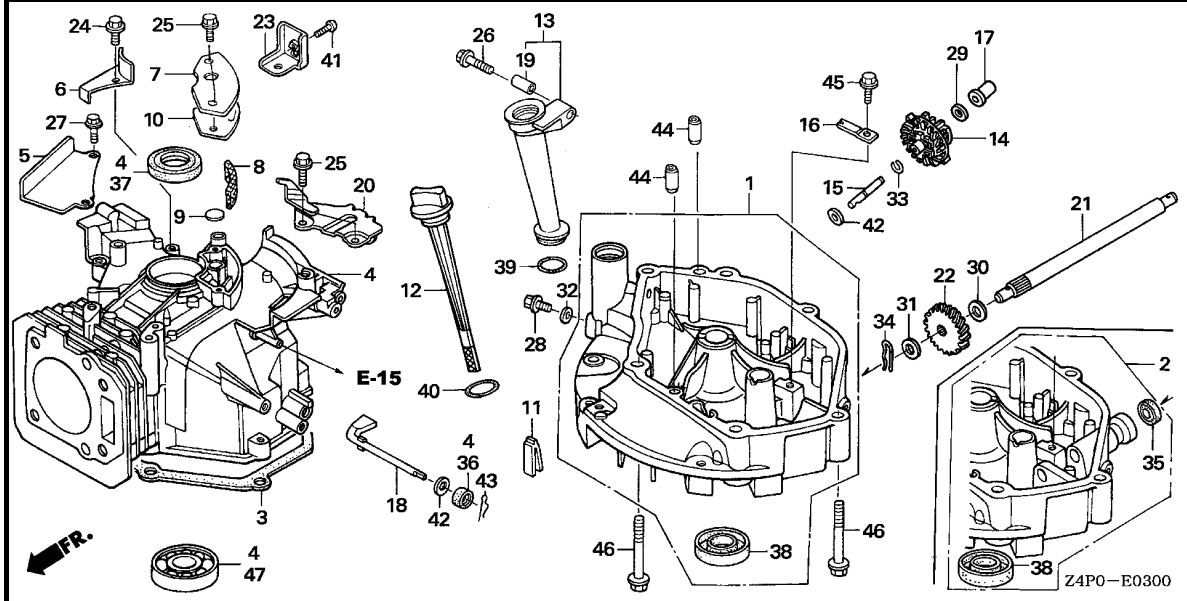

Ref. No.	L.O.N.	(Relative ref. Number) Description	F.R.T.
1		(2)	
	1131C1	PAN, OIL ----------	0.3
3	1131C2	PACKING, OIL PAN ----------	0.3
4	1101A0	BARREL, CYLINDER ----------	1.5
7		(10)	
	1111D1	COVER, BREATHER AND/OR PACKING, BREATHER COVER -----	0.2
8	1111E5	FILTER, BREATHER ----------	0.2
9	1111K9	VALVE, BREATHER ----------	0.2
13		(39)	
	1101B9	EXTENSION, OIL FILLER AND/OR PACKING, OIL FILLER EXTENSION	0.1
14	1161C4	GOVERNOR ASSEMBLY ----------	0.4
17	1161B6	SLIDER, GOVERNOR ----------	0.4
18	1161B4	SHAFT, GOVERNOR ARM ---------	0.3
21		(35)	
	2131J5	SHAFT, DRIVE ----------	0.3
22	2131D5	GEAR, DRIVEN ----------	0.3
36	1101C4	OIL SEAL, GOVERNOR ARM SHAFT -	0.3
37	1101E6	OIL SEAL, CRANKSHAFT :UPPER --	1.1
38	1101E7	OIL SEAL, CRANKSHAFT :LOWER --	0.3
47	1101J6	BEARING, CRANKSHAFT :UPPER ---	1.2

Ref. No.	Part No.	Description	Reqd. QTY GXV 160 UH2	Serial No.	Parts catalogue code
1	11300-Z1V-U90	PAN ASSY., OIL ----------	1	-------- --------	N5M
	11300-Z1V-V50	----------	1	-------- --------	SFY
	11300-Z1V-000	----------	1	-------- --------	A1S,A1SA,A14,N1,N1F,N15,N4,N45,N55,T1AH
2	11300-Z1V-800	PAN ASSY., OIL ----------	1	-------- --------	SFL,SFL1,SFY1
3	11381-ZE7-M10	PACKING, OIL PAN ----------	1		
4	12000-Z1V-000	BARREL ASSY., CYLINDER ------	1	-------- --------	A1S,A1SA,A14
	12000-Z2J-000	----------	1	-------- --------	N1,N1F,N15,N4,N45,N5M,N55,SFL,SFL1,SFY,SFY1,T1AH
5	12125-Z1V-000	PLATE, GUIDE ----------	1	-------- --------	N1,N1F,N15,N4,N45,N5M,N55,SFL,SFL1,SFY,SFY1,T1AH
6	12126-Z1V-000	PLATE A, GUIDE ----------	1	-------- --------	N1,N1F,N15,N4,N45,N5M,N55,SFL,SFL1,SFY,SFY1,T1AH
	12126-Z1V-800	----------	1	-------- --------	A1S,A1SA,A14
7	12355-Z1V-000	COVER COMP., BREATHER -------	1		
8	12367-883-003	FILTER, BREATHER ----------	1		
9	12372-ZE7-000	VALVE, BREATHER ----------	1		
10	12373-ZE7-000	PACKING, BREATHER COVER -----	1		
11	15335-ZE7-000	RUBBER, OIL RETURN ----------	1		
12	15620-ZE6-810	GAUGE COMP., OIL LEVEL ------	1		
13	15630-ZE6-810	EXTENSION, OIL FILLER -------	1		
14	16510-ZE6-000	GOVERNOR ASSY. ----------	1		
15	16515-ZE6-010	SHAFT, GOVERNOR HOLDER ------	1		
16	16525-ZE6-010	PLATE, GOVERNOR SHAFT HOLDER	1		
17	16531-Z1T-000	SLIDER, GOVERNOR ----------	1		
18	16541-ZE7-000	SHAFT, GOVERNOR ARM ---------	1		
19	17240-ZE6-000	COLLAR, EXTENSION ----------	1		
20	17560-Z1V-000	STAY COMP., TANK ----------	1		
21	23411-ZE7-000	SHAFT, DRIVE ----------	1	-------- --------	SFL,SFL1,SFY1

CYLINDER BARREL

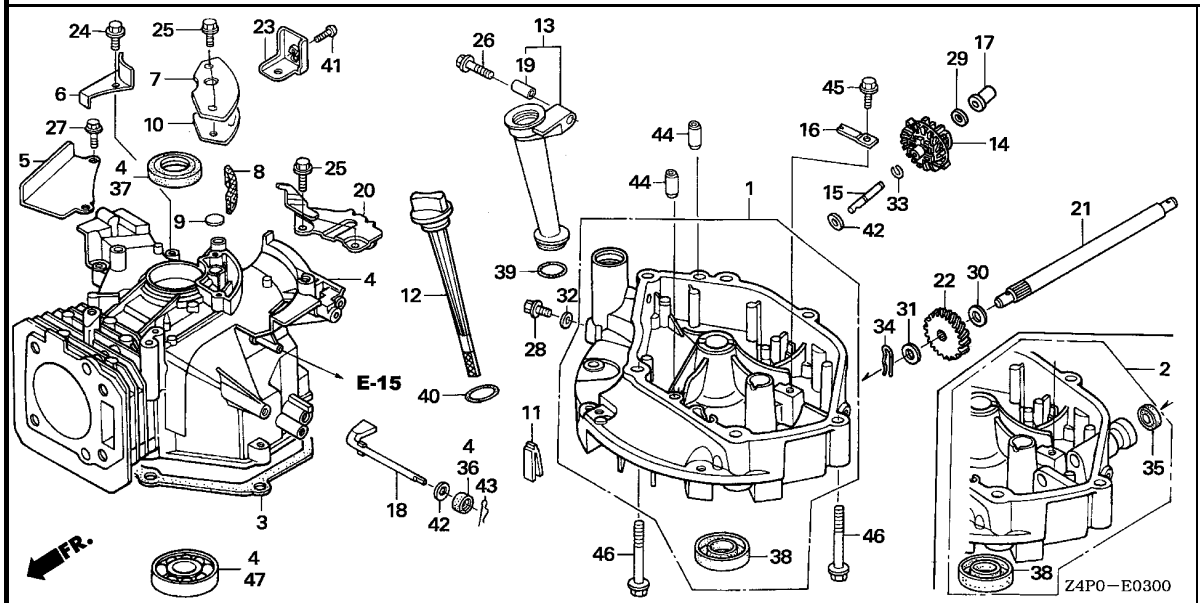

Ref. No.	Part No.	Description	Reqd. QTY GXV 160 UH2	Serial No.	Parts catalogue code
22	23421-ZE6-000	GEAR, DRIVEN (18T)	1	-------- --------	SFL,SFL1,SFY1
23	43143-Z1V-000	BASE COMP., HOLDER	1	-------- --------	A1S,A1SA,A14
24	90013-883-000	BOLT, FLANGE, 6X12(CT200)	1		
25	90014-952-000	BOLT, FLANGE, 6X14(CT200)	4		
26	90017-883-000	BOLT, FLANGE, 6X32	1		
27	90022-888-010	BOLT, FLANGE, 6X20(CT200)	2	-------- --------	N1,N1F,N15,N4,N45,N5M,N55,SFL,SFL1,SFY,SFY1,T1AH
28	90131-ZE1-000	BOLT, DRAIN PLUG	1		
29	90451-ZE1-000	WASHER, THRUST, 6MM	1		
30	90452-166-600	WASHER, THRUST, 12MM	1	-------- --------	SFL,SFL1,SFY1
31	90452-187-000	WASHER, 10X21	1	-------- --------	SFL,SFL1,SFY1
32	90601-ZE1-000	WASHER, DRAIN PLUG, 10.2MM	1		
33	90602-ZE1-000	CLIP, GOVERNOR HOLDER	1		
34	90701-ZE6-000	PIN, LOCK, 2.0	1	-------- --------	SFL,SFL1,SFY1
35	91205-Z1V-003	OIL SEAL, 12X20X6.5	1	-------- --------	SFL,SFL1,SFY1
36	91231-Z1V-003	OIL SEAL, 6X11X4	1		
37	91251-Z1V-003	OIL SEAL, 25X38X7	1		
38	91252-Z1V-003	OIL SEAL, 25.4X40X7	1		
39	91301-Z1V-003	O-RING, 22.1X2.2	1		
40	91302-Z1V-003	O-RING, 25.5X3	1		
41	93500-05016-0A	SCREW, PAN, 5X16	1	-------- --------	A1S,A1SA,A14
42	94101-06800	WASHER, PLAIN, 6MM	2		
43	94251-08000	PIN, LOCK, 8MM	1		
44	94301-08140	DOWEL PIN, 8X14	2		
45	95701-06012-08	BOLT, FLANGE, 6X12	1		

CYLINDER BARREL

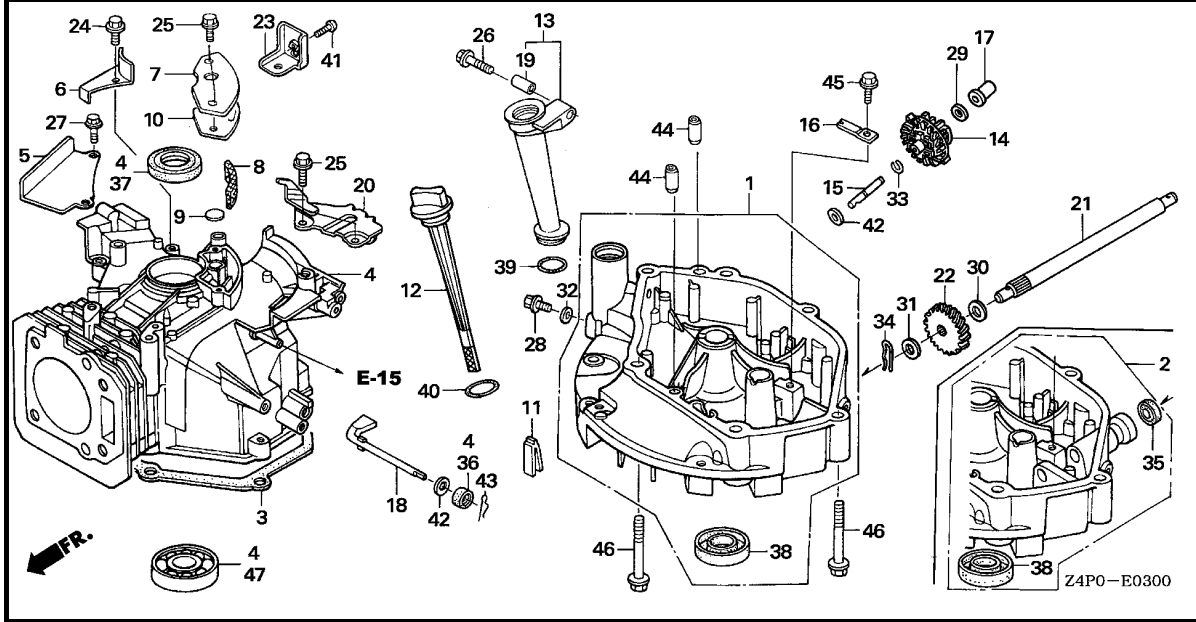

Ref. No.	Part No.	Description	Reqd. QTY GXV 160 UH2	Serial No.	Parts catalogue code
46	95701-08050-00	BOLT, FLANGE, 8X50	6		
47	96100-62050-00	BEARING, RADIAL BALL, 6205 ..	1		

CRANKSHAFT/PISTON

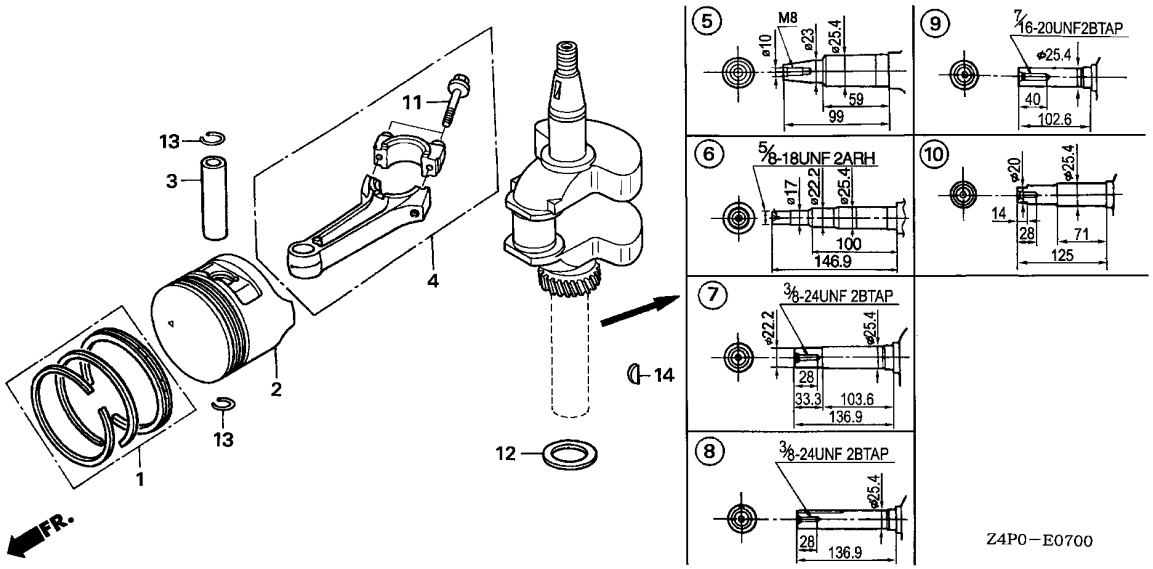

Ref. No.	L.O.N.	(Relative ref. Number) Description	F.R.T.
2		(1,3,4)	
	1111R1	PISTON AND/OR RING SET AND/OR BEARING AND/OR ROD ----------	1.2
		.INCLUDES: Inspection/ Measurement/Cleaning	
5		(6,7,8,9,10)	
	1101F0	CRANKSHAFT ----------	1.1

Ref. No.	Part No.	Description	Reqd. QTY GXV 160 UH2	Serial No.	Parts catalogue code
1	13010-ZL0-003	RING SET, PISTON (STD.) (TEIKOKU)	1		
	13010-ZL0-004	RING SET, PISTON (STD.) (NIPPON)	1		
	13011-ZL0-003	RING SET, PISTON (0.25) (TEIKOKU)	(1)		
	13011-ZL0-004	RING SET, PISTON (0.25) (NIPPON)	(1)		
	13012-ZL0-003	RING SET, PISTON (0.50) (TEIKOKU)	(1)		
	13012-ZL0-004	RING SET, PISTON (0.50) (NIPPON)	(1)		
	13013-ZL0-003	RING SET, PISTON (0.75) (TEIKOKU)	(1)		
	13013-ZL0-004	RING SET, PISTON (0.75) (NIPPON)	(1)		
2	13101-Z1T-000	PISTON (STD.)(JIALING-HONDA)	1		
	13102-ZE7-020	PISTON (0.25) ----------	(1)		
	13103-ZE7-020	PISTON (0.50) ----------	(1)		
	13104-ZE7-020	PISTON (0.75) ----------	(1)		
3	13111-Z1T-000	PIN, PISTON ----------	1		
4	13200-Z1V-000	ROD ASSY., CONNECTING -------	1		
5	13310-ZE7-U41	CRANKSHAFT COMP. ----------	1	-------- --------	N5M
6	13310-ZE7-V20	CRANKSHAFT COMP. ----------	1	-------- --------	T1AH
7	13310-ZE7-010	CRANKSHAFT COMP. ----------	1	-------- --------	A1S,A1SA,A14,N1,N1F,N15
8	13310-ZE7-641	CRANKSHAFT COMP. ----------	1	-------- --------	N4,N45
9	13310-ZE7-661	CRANKSHAFT COMP. ----------	1	-------- --------	N55
10	13310-ZE7-771	CRANKSHAFT COMP. ----------	1	-------- --------	SFL,SFL1,SFY,SFY1

CRANKSHAFT/PISTON

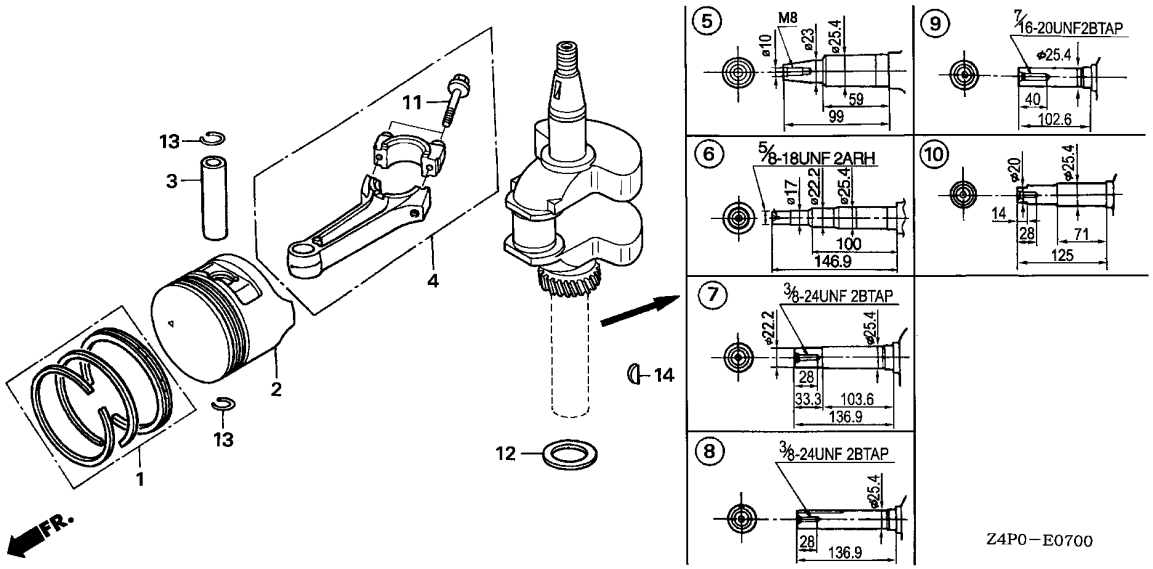

Ref. No.	Part No.	Description	Reqd. QTY GXV 160 UH2	Serial No.	Parts catalogue code
11	90001-ZE1-000	BOLT, CONNECTING ROD --------	2		
12	90401-ZE7-W00	WASHER, THRUST, 25.6MM ------	1		
13	90551-ZE1-000	CLIP, PISTON PIN, 18MM ------	2		
14	90741-ZV4-000	KEY, SPECIAL, 16X15 ---------	1	-------- --------	A1SA

CAMSHAFT

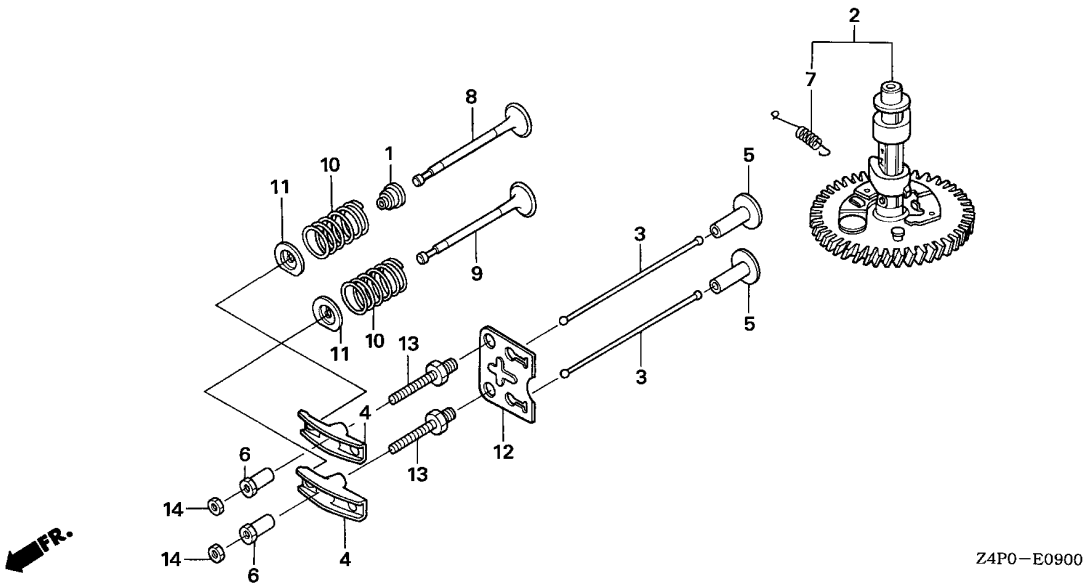

Ref. No.	L.O.N.	(Relative ref. Number) Description	F.R.T.
1	1111K2	SEAL, INTAKE VALVE STEM ·····	0.6
		.INCLUDES: Valve clearance adjustment	
2	1111C2	CAMSHAFT ·····	0.6
		.INCLUDES: Valve clearance adjustment	
3	1111L6	ROD, PUSH :INTAKE ·····	0.2
		.INCLUDES: Valve clearance adjustment	
	1111L6A	.Replace exhaust push rod add	0.1
	1111L7	ROD, PUSH :EXHAUST ·····	0.2
		.INCLUDES: Valve clearance adjustment	
	1111L7A	.Replace intake push rod add ·	0.1
4	1111A2	ARM, ROCKER :INTAKE ·····	0.2
		.INCLUDES: Valve clearance adjustment	
	1111A2A	.Replace exhaust rocker arm add ·····	0.1
	1111A1	ARM, ROCKER :EXHAUST ·····	0.2
		.INCLUDES: Valve clearance adjustment	
	1111A1A	.Replace intake rocker arm add	0.1
5	1111L9	LIFTER, VALVE :INTAKE ·····	0.6
+		.NOTE: Same time for two units	

Ref. No.	Part No.	Description	Reqd. QTY GXV 160 UH2	Serial No.	Parts catalogue code
1	12209-ZE6-003	SEAL, VALVE STEM ·····	1		
2	14100-ZE7-000	CAMSHAFT ASSY. ·····	1	-------- --------	A1S,A1SA,A14,N1,N1F,N15,N4,N45,N5M,N55,T1AH
	14100-ZE7-770	·····	1	-------- --------	SFL,SFL1,SFY,SFY1
3	14410-ZE1-010	ROD, PUSH ·····	2		
4	14431-ZE1-000	ARM, VALVE ROCKER ·····	2		
5	14441-ZE1-010	LIFTER, VALVE ·····	2		
6	14451-ZE1-013	PIVOT, ROCKER ARM ·····	2		
7	14568-ZE1-000	SPRING, WEIGHT RETURN ·····	1		
8	14711-ZF1-000	VALVE, IN. ·····	1		
9	14721-ZE7-000	VALVE, EX. ·····	1		
10	14751-ZE1-000	SPRING, VALVE ·····	2		
11	14771-ZE1-000	RETAINER, IN. VALVE SPRING ··	2		
12	14791-ZE1-010	PLATE, PUSH ROD GUIDE ·····	1		
13	90012-ZE0-010	BOLT, PIVOT, 8MM ·····	2		
14	90206-ZE1-000	NUT, PIVOT ADJUSTING ·····	2		

CAMSHAFT

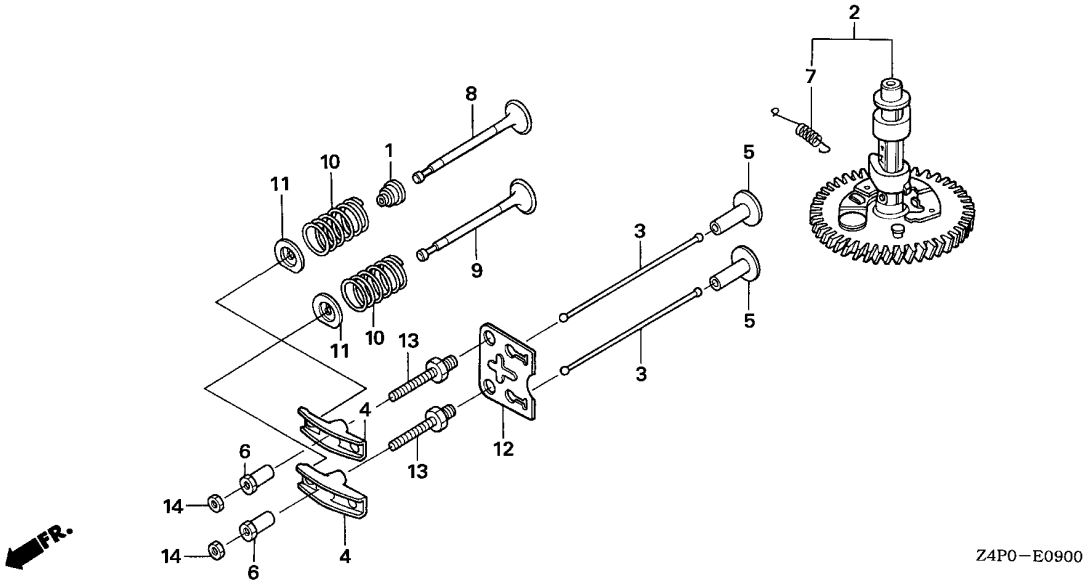

Ref. No.	L.O.N.	(Relative ref. Number) Description	F.R.T.
+ 5		.INCLUDES: Valve clearance adjustment	
	1111MO	LIFTER, VALVE :EXHAUST ·····	0.6
		.NOTE: Same time for two units	
		.INCLUDES: Valve clearance adjustment	
8	1111L1	VALVE, INTAKE ·····	0.7
		.INCLUDES: Valve clearance adjustment and reface	
	1111L1E	.Replace intake and exhaust all add ·····	0.1
9	1111LO	VALVE, EXHAUST ·····	0.7
		.INCLUDES: Valve clearance adjustment and reface	
	1111LOE	.Replace intake and exhaust all add ·····	0.1
10	1111P3	SPRING, VALVE :INTAKE ·····	0.6
		.INCLUDES: Valve clearance adjustment	
	1111P3A	.Replace intake and exhaust all add ·····	0.1
	1111P4	SPRING, VALVE :EXHAUST ·····	0.6
+		.INCLUDES: Valve clearance adjustment	

CAMSHAFT

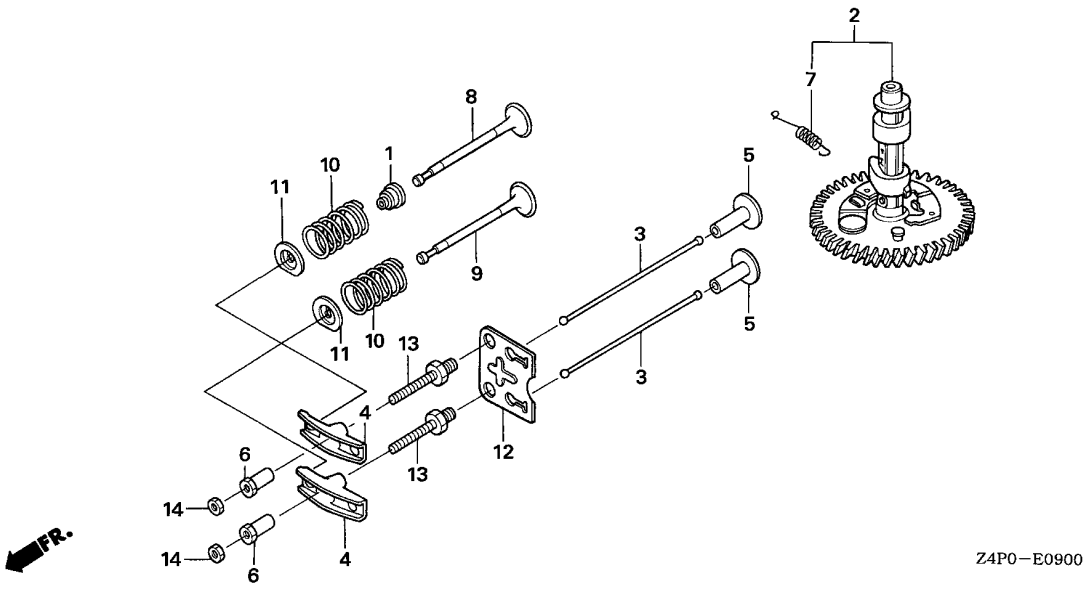

Ref. No.	L.O.N.	(Relative ref. Number) Description	F.R.T.
+10	1111P4A	.Replace intake and exhaust all add	0.1

RECOIL STARTER

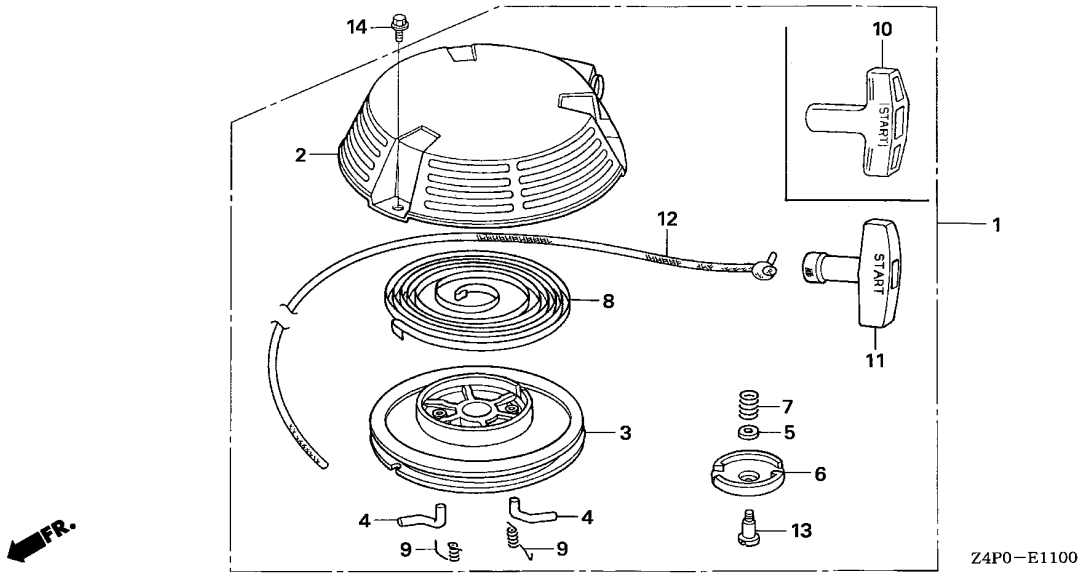

Ref. No.	L.O.N.	(Relative ref. Number) Description	F.R.T.
1	1121B9	STARTER, RECOIL ----------	0.1
3	1121B1	REEL, RECOIL STARTER ---------	0.3
4		(9)	
	1121B0	RATCHET, STARTER AND/OR SPRING, RATCHET ----------	0.2
		.NOTE: Same time for two units	
6		(7)	
	1121A4	GUIDE, RATCHET ----------	0.2
8	1121B7	SPRING, RECOIL STARTER RETURN	0.3
10		(11)	
	1121A3	GRIP, RECOIL STARTER ---------	0.1
12	1121B3	ROPE, RECOIL STARTER ---------	0.3

Ref. No.	Part No.	Description	Reqd. QTY GXV 160 UH2	Serial No.	Parts catalogue code
1	28400-Z1V-003ZA	STARTER ASSY., RECOIL			
		NH1.....BLACK	1	-------- --------	SFL1,T1AH
	28400-Z1V-003ZB	*R280*.....POWER RED	1	-------- --------	N1,N4,SFL,SFL1,SFY,SFY1
	28400-Z1V-801ZA	STARTER ASSY., RECOIL (LONG ROPE)			
		NH1.....BLACK	1	-------- --------	A1S,A1SA,A14,N1F,N15,N45,N5M,N55
	28400-Z1V-801ZB	*R280*.....POWER RED	1	-------- --------	A1S,A1SA,A14,N1F,N15,N45,N5M,N55
2	28410-Z1V-003ZA	CASE COMP., RECOIL STARTER			
		R280.....POWER RED	1	-------- --------	A1S,A1SA,A14,N1,N1F,N15,N4,N45,N5M,N55,SFL,SFL1,SFY,SFY1
	28410-Z1V-003ZB	*NH1*.....BLACK	1	-------- --------	A1S,A1SA,A14,N1F,N15,N45,N5M,N55,SFL1,T1AH
3	28420-Z1V-003	REEL, RECOIL STARTER (BLACK)	1		
4	28422-ZH8-801	RATCHET, STARTER ----------	2		
5	28431-ZH8-801	PLATE, FRICTION ----------	1		
6	28433-ZH8-801	GUIDE, RATCHET ----------	1		
7	28441-ZH8-801	SPRING, FRICTION ----------	1		
8	28442-ZH8-003	SPRING, RECOIL STARTER ------	1		
9	28443-ZH8-801	SPRING, RETURN ----------	2		
10	28461-ZE1-003	KNOB, RECOIL STARTER --------	1	-------- --------	A1S,A1SA,A14,N1F,N15,N45,N5M,N55
11	28461-ZH8-003	GRIP, STARTER ----------	1	-------- --------	N1,N4,SFL,SFL1,SFY,SFY1,T1AH
12	28462-ZH8-003	ROPE, RECOIL STARTER --------	1	-------- --------	N1,N4,SFL,SFL1,SFY,SFY1,T1AH
	28462-Z1V-801	ROPE, RECOIL STARTER (LONG) (2360MM)	1	-------- --------	A1S,A1SA,A14,N1F,N15,N45,N5M,N55
13	90003-ZH8-801	SCREW, SETTING ----------	1		
14	95701-06008-00	BOLT, FLANGE, 6X8 ----------	3		

E-12 FAN COVER

C11

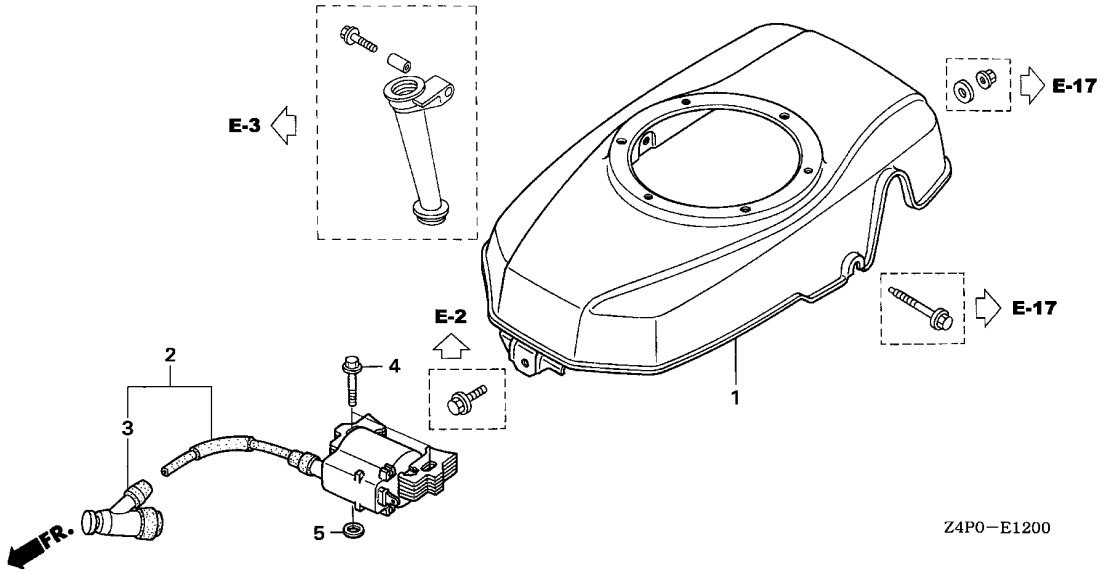

Ref. No.	L.O.N.	(Relative ref. Number) Description	F.R.T.
1	1141G8	COVER, ENGINE COOLING FAN ----	0.2
2	6141A5	COIL, IGNITION(ONE) ----------	0.2
3	6141B8	TERMINAL, HIGH TENSION -------	0.1

Ref. No.	Part No.	Description	Reqd. QTY GXV 160 UH2	Serial No.	Parts catalogue code
1	19610-Z1V-000ZA	COVER COMP., FAN			
		R280.....POWER RED	1	-------- --------	A1S,A1SA,A14,N1,N1F,N15,N4,N45,N5M,N55,SFL,SFL1,SFY,SFY1
	19610-Z1V-000ZB	*NH1*.....BLACK	1	-------- --------	A1S,A1SA,A14,N1F,N15,N45,N5M,N55,SFL1,T1AH
2	30500-Z1V-003	COIL ASSY., IGNITION --------	1		
3	30700-Z1V-003	CAP ASSY., NOISE SUPPRESSOR -	1		
4	90015-883-000	BOLT, FLANGE, 6X28 ----------	2		
5	90581-Z1V-000	WASHER, PLAIN, 6MM ----------	2		

CARBURETOR

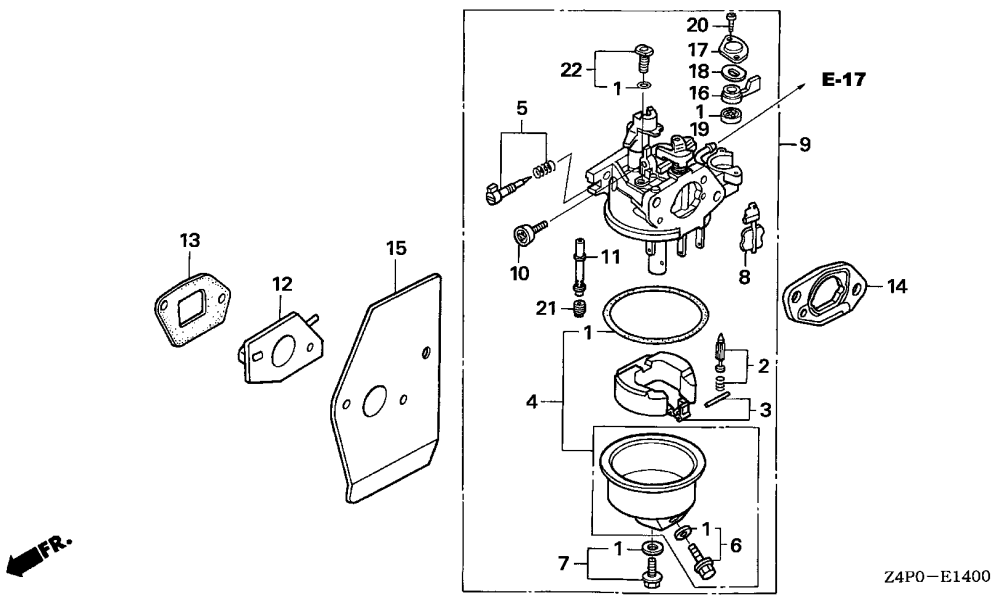

Ref. No.	L.O.N.	(Relative ref. Number) Description	F.R.T.
1	3111B1	GASKET SET, CARBURETOR ·····	0.3
2		(3)	
	3111E1	VALVE SET, FLOAT AND/OR FLOAT SET ·····	0.3
4	3111A3	CHAMBER SET, FLOAT AND/OR GASKET, FLOAT CHAMBER ·····	0.2
5	3111D7	SCREW SET, PILOT ·····	0.2
9	3111F3	CARBURETOR ·····	0.2
12		(13)	
	3111C0	INSULATOR, CARBURETOR AND/OR PACKING, INSULATOR ·····	0.2
15	3111C8	PACKING, CARBURETOR ·····	0.2
19		(16,17,18)	
	3101C5	PACKING, FUEL COCK ·····	0.2
21	3111C3	JET, MAIN ·····	0.3

Ref. No.	Part No.	Description	Reqd. QTY GXV 160 UH2	Serial No.	Parts catalogue code
1	16010-ZE0-025	GASKET SET ·····	1		
2	16011-ZE0-005	VALVE SET, FLOAT ·····	1		
3	16013-ZE0-005	FLOAT SET ·····	1		
4	16015-ZE0-831	CHAMBER SET, FLOAT ·····	1		
5	16016-ZH7-W01	SCREW SET, PILOT ·····	1		
6	16024-ZE1-811	SCREW SET, DRAIN ·····	1		
7	16028-ZE0-005	SCREW SET ·····	1		
8	16045-ZE7-005	CHOKE SET ·····	1		
9	16100-Z1V-J71	CARBURETOR ASSY. (BE66M A) ··	1	-------- --------	N5M
	16100-Z1V-003	CARBURETOR ASSY. (BE66J A) ··	1	-------- --------	A1S,A1SA,A14,N1,N1F,N15,N4,N45,N55,SFL,SFL1,SFY,SFY1,T1AH
10	16124-ZE0-005	SCREW, THROTTLE STOP ·····	1		
11	16166-Z1V-J71	NOZZLE, MAIN ·····	1	-------- --------	N5M
	16166-Z1V-003	·····	1	-------- --------	A1S,A1SA,A14,N1,N1F,N15,N4,N45,N55,SFL,SFL1,SFY,SFY1,T1AH
12	16211-ZE7-000	INSULATOR, CARBURETOR ·····	1		
13	16212-ZE7-M10	PACKING, INSULATOR ·····	1		
14	16220-ZE6-010	SPACER COMP., CARBURETOR ····	1		
15	16221-ZE7-M11	PACKING, CARBURETOR ·····	1		
16	16953-ZE1-812	LEVER, COCK ·····	1		
17	16954-ZE1-812	PLATE, LEVER SETTING ·····	1		
18	16956-ZE1-811	SPRING, COCK LEVER ·····	1		
19	16957-ZE1-812	PACKING, FUEL COCK ·····	1		
20	93500-03006-1H	SCREW, PAN, 3X6 ·····	2		
21	99101-ZH8-0600	JET, MAIN, #60 ·····	(1)	-------- --------	A1S,A1SA,A14,N1,N1F,N15,N4,N45,N55,SFL,SFL1,SFY,SFY1,T1AH
	99101-ZH8-0620	JET, MAIN, #62 ·····	(1)		

CARBURETOR

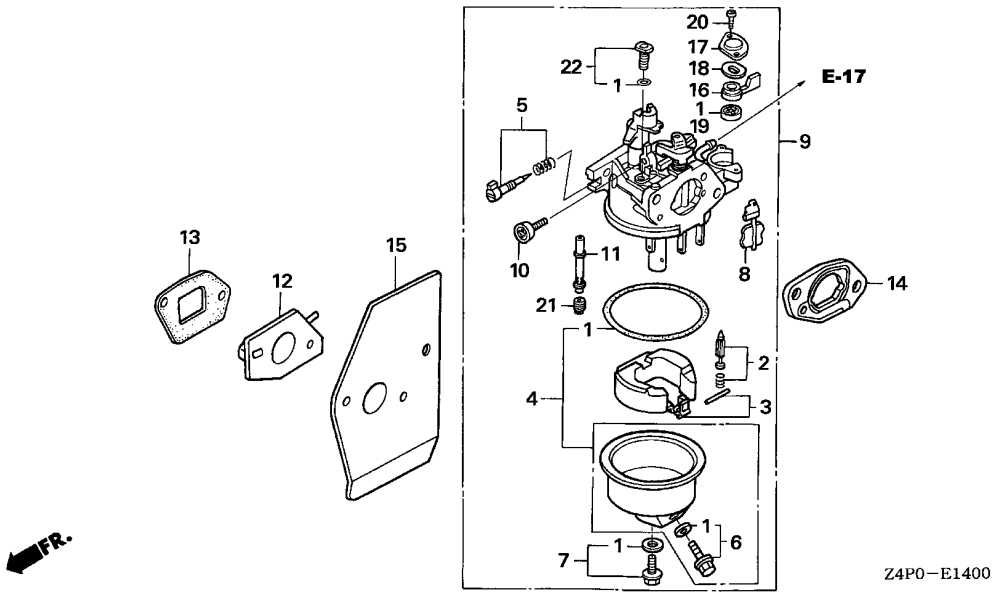

Ref. No.	Part No.	Description	Reqd. QTY GXV 160 UH2	Serial No.		Parts catalogue code
21)	99101-ZH8-0650	JET, MAIN, #65	1	--------	--------	A1S,A1SA,A14,N1,N1F,N15,N4,N45,N55,SFL,SFL1,SFY,SFY1,T1AH
			(1)	--------	--------	N5M
	99101-ZH8-0680	JET, MAIN, #68	1	--------	--------	N5M
22	99204-ZE0-0350	JET SET, PILOT, #35	1			

AIR CLEANER

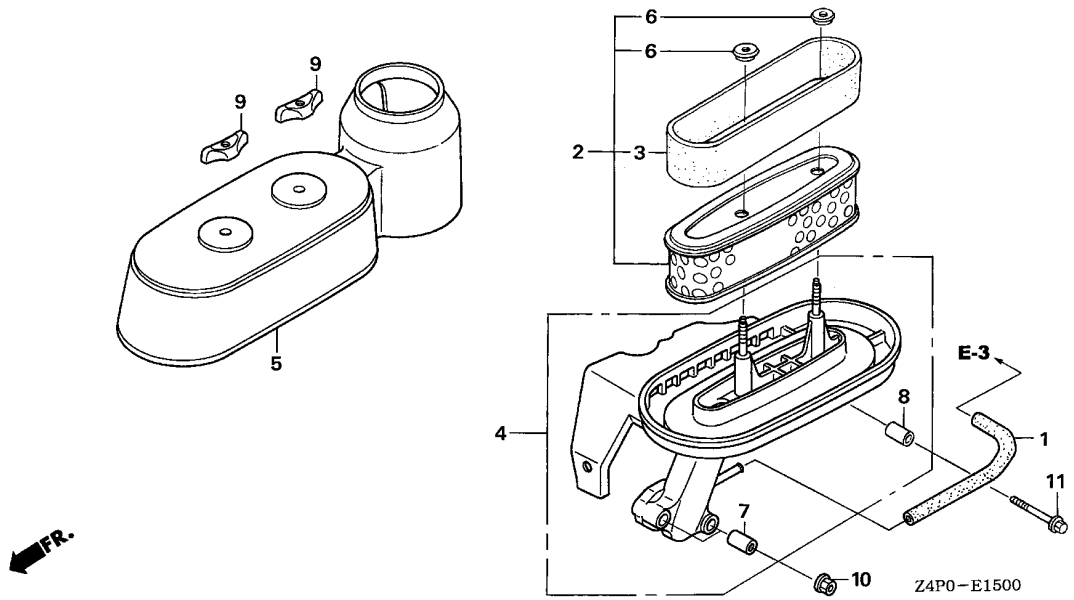

Ref. No.	L.O.N.	(Relative ref. Number) Description	F.R.T.
1	1111K5	TUBE, BREATHER	0.1
2	3121B8	ELEMENT, AIR CLEANER	0.1
3	3121C1	FILTER, OUTER	0.1
4	3121A5	CASE, AIR CLEANER	0.2
5	3121B1	COVER, AIR CLEANER	0.1

Ref. No.	Part No.	Description	Reqd. QTY GXV 160 UH2	Serial No.	Parts catalogue code
1	15721-ZE7-000	TUBE, BREATHER	1		
2	17210-Z1V-003	ELEMENT, AIR CLEANER	1		
3	17218-888-003	FILTER, OUTER	1		
4	17220-Z1V-000	CASE COMP., AIR CLEANER	1		
5	17231-Z1V-000	COVER, AIR CLEANER	1		
6	17232-891-000	GROMMET, AIR CLEANER	2		
7	17238-ZE7-710	COLLAR, AIR CLEANER	2		
8	17239-ZE6-300	COLLAR B, AIR CLEANER	1		
9	90300-Z1V-000	NUT, AIR CLEANER	2		
10	94050-06000	NUT, FLANGE, 6MM	2		
11	95701-06035-00	BOLT, FLANGE, 6X35	1		

E-16 MUFFLER

C15

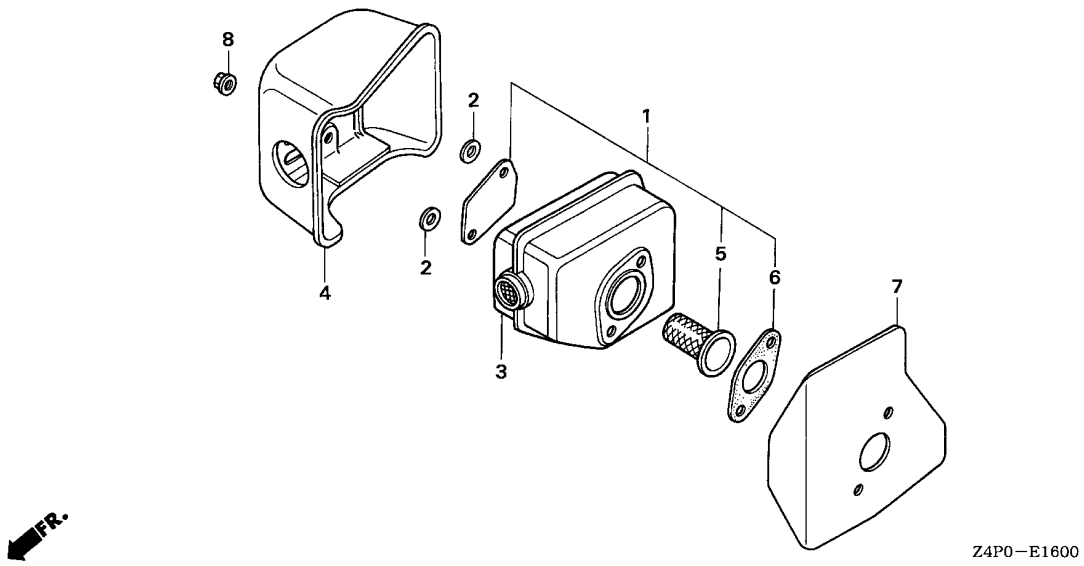

Ref. No.	L.O.N.	(Relative ref. Number) Description	F.R.T.
1	3131A0	ARRESTER KIT, SPARK ----------	0.2
3	3131C5	MUFFLER, EXHAUST ------------	0.2
4	3131D6	PROTECTOR, EXHAUST MUFFLER ---	0.1
5	3131A1	ARRESTER, SPARK -------------	0.2
6	3131B4	GASKET, EXHAUST MUFFLER ------	0.2

Ref. No.	Part No.	Description	Reqd. QTY GXV 160 UH2	Serial No.	Parts catalogue code
1	06180-ZE6-820	ARRESTER KIT, SPARK ---------	(1)		
2	18292-ZE7-M10	PACKING, PROTECTOR ----------	2	-------- --------	A1S,A1SA,A14,N1F,N15,N4,N45,N5M,N55,SFL,SFL1,SFY,SFY1
3	18310-Z1V-000	MUFFLER COMP. ----------	1		
4	18320-Z1V-000	PROTECTOR COMP., MUFFLER ----	1		
5	18355-888-810	ARRESTER, SPARK ------------	(1)		
6	18381-ZE6-820	GASKET, MUFFLER ------------	(1)		
7	18381-Z1V-000	GASKET, MUFFLER ------------	1		
8	90343-ZE6-000	NUT, SELF-LOCK, 6MM ---------	2		

FUEL TANK

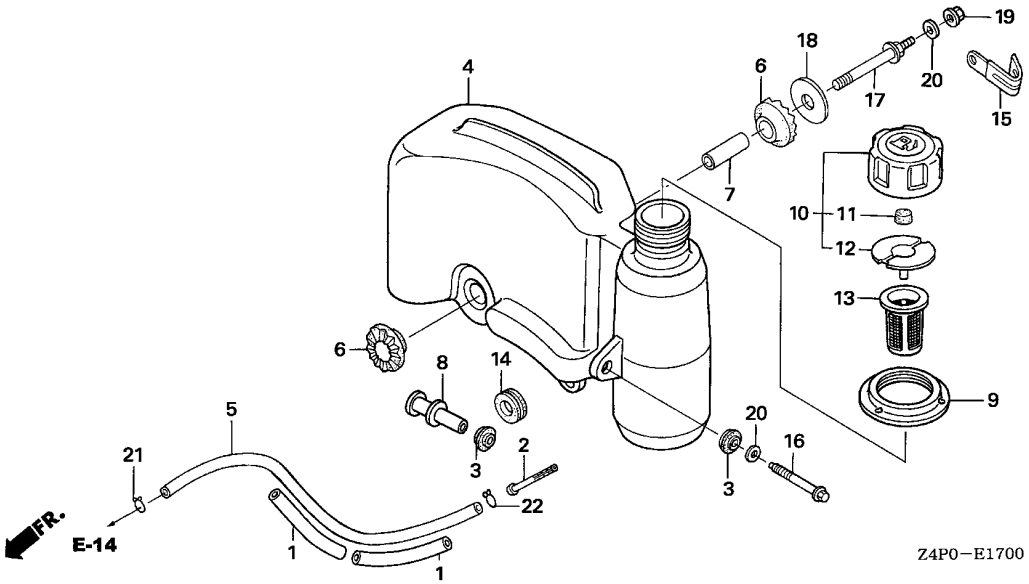

Ref. No.	L.O.N.	(Relative ref. Number) Description	F.R.T.
2	3101H8	STRAINER, FUEL	0.2
4	3101H7	TANK, FUEL	0.2
5	3101F6	TUBE, FUEL	0.1
6	3101M0	RUBBER B, TANK MOUNTING	0.2
		.NOTE: Same time for two units	
12	3101L9	PACKING, FUEL CAP	0.1
13	3101M1	GAUGE, FUEL LEVEL	0.1

Ref. No.	Part No.	Description	Reqd. QTY GXV 160 UH2	Serial No.	Parts catalogue code
1	16854-ZH8-000	RUBBER, SUPPORTER (107MM)	2		
2	16952-Z1V-000	STRAINER, FUEL	1		
3	17506-ZE7-000	RUBBER, TANK SETTING	2		
4	17510-Z1V-010	TANK COMP., FUEL	1		
5	17512-ZE7-000	TUBE, FUEL	1		
6	17516-896-700	RUBBER B, TANK MOUNTING	2		
7	17518-Z1V-000	COLLAR, TANK SET	1		
8	17519-Z1V-000	COLLAR COMP., TANK	1		
9	17532-Z1V-000	RUBBER, TANK MOUNTING	1		
10	17620-Z1V-000	CAP ASSY., FUEL TANK	1		
11	17622-888-010	SPONGE, FUEL CAP BREATHER	1		
12	17624-ZE7-000	PACKING, FUEL CAP	1		
13	17636-Z1V-010	GAUGE, FUEL LEVEL	1		
14	80103-MG2-000	CUSHION, RR. FENDER	1		
15	90010-GE0-710	CLIP, TUBE	1	-------- --------	A1S,A14
16	90014-Z1V-000	BOLT, FLANGE, 6X47(CT200)	1		
17	90016-Z1V-000	BOLT, TANK STAY	1		
18	90455-896-700	WASHER, TANK MOUNTING	1		
19	94050-06000	NUT, FLANGE, 6MM	1		
20	94103-06000	WASHER, PLAIN, 6MM	2		
21	95002-02080	CLIP, TUBE (B8)	1		
22	95002-70000	CLIP, TUBE (C11)	1		

E-19 FLYWHEEL(1)

D 1

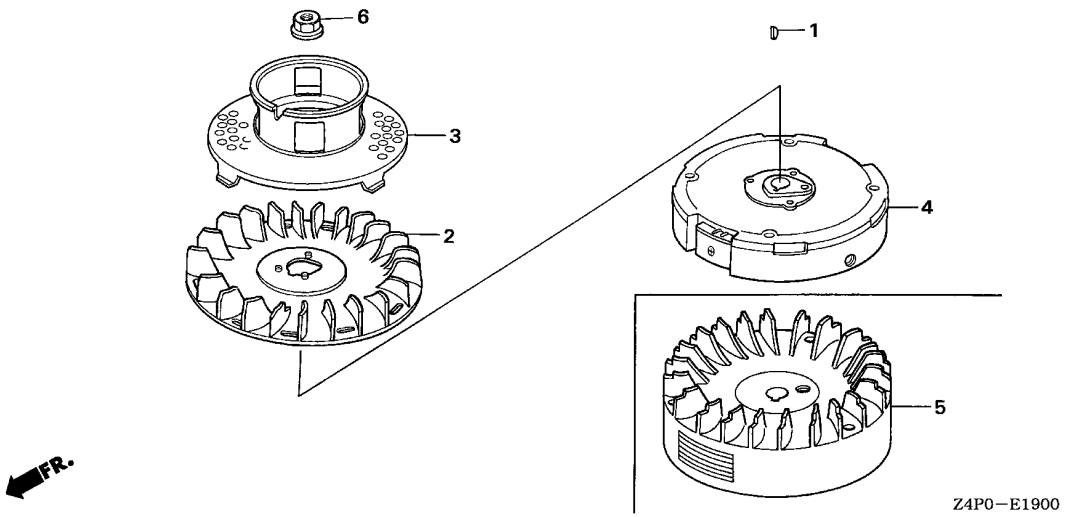

Ref. No.	L.O.N.	(Relative ref. Number) Description	F.R.T.
2	1141G7	FAN, ENGINE COOLING ·····	0.2
3	1121A9	PULLEY, RECOIL STARTER ·····	0.2
4		(5)	
	2161B5	FLYWHEEL ·····	0.3

Ref. No.	Part No.	Description	Reqd. QTY GXV 160 UH2	Serial No.	Parts catalogue code
1	13331-357-000	KEY, SPECIAL WOODRUFF, 25X18	1	-------- --------	N1,N1F,N15,N4,N45,N5M,N55,SFL,SFL1,SFY,SFY1,T1AH
2	19511-Z1T-000	FAN, COOLING ·····	1	-------- --------	N1F,N5M,SFL,SFL1,SFY,SFY1
3	28450-Z1V-000	PULLEY COMP., STARTER ·····	1	-------- --------	N1,N1F,N15,N4,N45,N5M,N55,SFL,SFL1,SFY,SFY1,T1AH
4	31110-Z1V-003	FLYWHEEL COMP. ·····	1	-------- --------	N1F,N5M,SFL,SFL1,SFY,SFY1
5	31110-Z1V-810	FLYWHEEL COMP. (BRAKE) ·····	1	-------- --------	N1,N15,N4,N45,N55,T1AH
6	90201-Z1T-000	NUT, SPECIAL, 14MM ·····	1	-------- --------	N1,N1F,N15,N4,N45,N5M,N55,SFL,SFL1,SFY,SFY1,T1AH

E-19-1 FLYWHEEL(2)

D 2

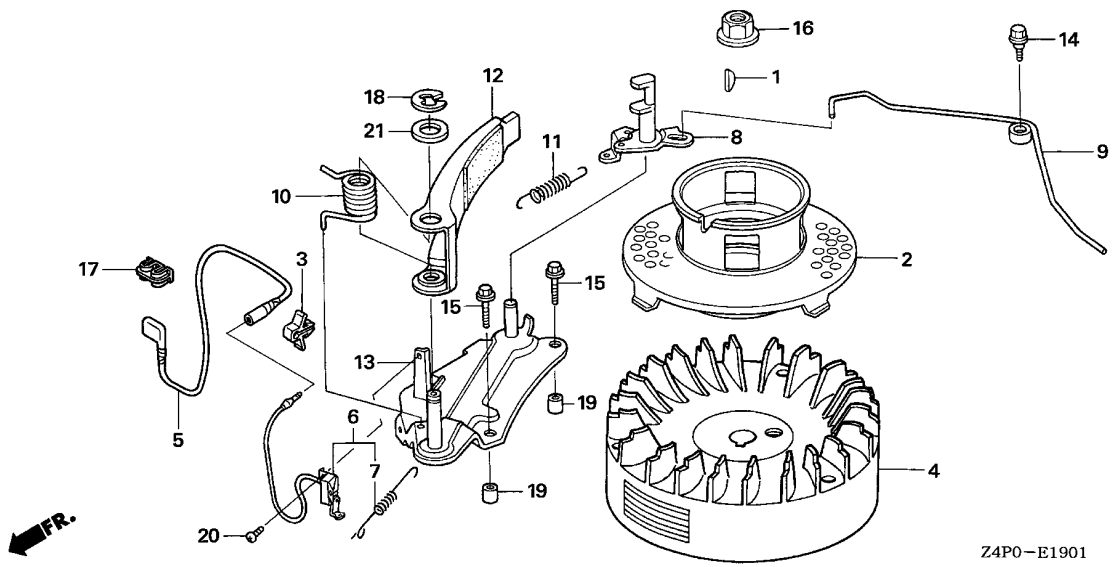

Ref. No.	L.O.N.	(Relative ref. Number) Description	F.R.T.
2	1121A9	PULLEY, RECOIL STARTER -------	0.2
4	2161B5	FLYWHEEL ----------	0.3
6	6151D9	SWITCH, ENGINE STOP ----------	0.3
8	2161G3	CAM, FLYWHEEL BRAKE ----------	0.4
10	2161G2	SPRING, FLYWHEEL BRAKE -------	0.4
11	2161G1	SPRING, FLYWHEEL BRAKE SHOE RETURN ----------	0.4

Ref. No.	Part No.	Description	Reqd. QTY GXV 160 UH2	Serial No.	Parts catalogue code
1	13331-357-000	KEY, SPECIAL WOODRUFF, 25X18	1	-------- --------	A1S,A1SA,A14
2	28450-Z1V-000	PULLEY COMP., STARTER -------	1	-------- --------	A1S,A1SA,A14
3	30701-883-000	CLIP, HIGH TENSION CORD (8MM)	1	-------- --------	A1S,A1SA,A14
4	31110-Z1V-810	FLYWHEEL COMP. (BRAKE) ------	1	-------- --------	A1S,A1SA,A14
5	32195-Z1V-810	CORD, STOP SWITCH (BRAKE) ---	1	-------- --------	A1S,A1SA,A14
6	35120-Z1V-811	SWITCH ASSY., ENGINE STOP (BRAKE)	1	-------- --------	A1S,A1SA,A14
7	35129-Z1V-811	SPRING, SWITCH CONTROL ------	1	-------- --------	A1S,A1SA,A14
8	43140-Z1V-000	CAM COMP., BRAKE ----------	1	-------- --------	A1S,A1SA,A14
9	43145-ZE7-003	ROD, THROTTLE RETURN --------	1	-------- --------	A1S,A1SA,A14
10	75112-ZE6-000	SPRING, BRAKE ----------	1	-------- --------	A1S,A1SA,A14
11	75113-ZE6-000	SPRING, BRAKE RETURN --------	1	-------- --------	A1S,A1SA,A14
12	75120-ZE6-013	BRAKE COMP. ----------	1	-------- --------	A1S,A1SA,A14
13	75130-ZE7-000	BASE COMP., BRAKE ----------	1	-------- --------	A1S,A1SA,A14
14	90015-ZE6-000	BOLT, FLANGE, 6MM ----------	1	-------- --------	A1S,A1SA,A14
15	90018-ZE1-000	BOLT, FLANGE, 6X23(CT200) ---	2	-------- --------	A1S,A1SA,A14
16	90201-Z1T-000	NUT, SPECIAL, 14MM ----------	1	-------- --------	A1S,A1SA,A14
17	90505-MCT-000	CLAMP, PIPE ----------	1	-------- --------	A1S,A1SA,A14
18	90653-723-000	E-RING, 10MM ----------	1	-------- --------	A1S,A1SA,A14
19	90702-ZE6-000	DOWEL PIN, 8X9 ----------	2	-------- --------	A1S,A1SA,A14
20	93500-04008-0A	SCREW, PAN, 4X8 ----------	1	-------- --------	A1S,A1SA,A14
21	94102-12800	WASHER, PLAIN, 12MM ---------	1	-------- --------	A1S,A1SA,A14

2

CONTROL(1)

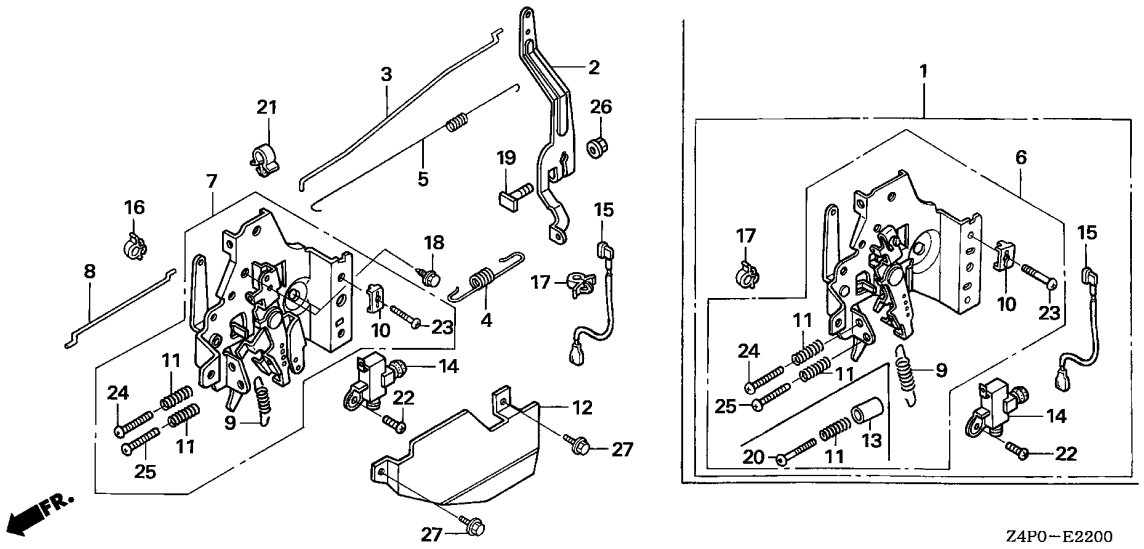

Ref. No.	L.O.N.	(Relative ref. Number) Description	F.R.T.
1		(7)	
	1161A5	CONTROL, THROTTLE/GOVERNOR ---	0.3
2	1161A0	ARM, GOVERNOR ----------	0.3
3	1161B1	ROD, GOVERNOR ----------	0.3
4	1161C5	SPRING, GOVERNOR ----------	0.2
5	1161C2	SPRING, THROTTLE RETURN ------	0.3
8	8101R5	ROD, GOVERNOR CHOKE CONTROL --	0.2
9	1161C0	SPRING, LEVER ----------	0.1
14	6151K1	SWITCH, THROTTLE/GOVERNOR ENGINE STOP ----------	0.2
15	6111B3	CORD, STOP SWITCH ----------	0.2

Ref. No.	Part No.	Description	Reqd. QTY GXV 160 UH2	Serial No.	Parts catalogue code
1	16500-ZE7-W31	CONTROL ASSY. ----------	1	-------- --------	SFL,SFL1,SFY,SFY1
2	16551-ZE7-000	ARM, GOVERNOR ----------	1	-------- --------	N1,N4,N5M,SFL,SFL1,SFY,SFY1,T1AH
3	16555-ZE7-000	ROD, GOVERNOR ----------	1	-------- --------	N1,N4,N5M,SFL,SFL1,SFY,SFY1,T1AH
4	16561-ZE7-020	SPRING, GOVERNOR ----------	1	-------- --------	N1,N4,SFL,SFL1,SFY,SFY1,T1AH
	16561-ZE7-711	----------	1	-------- --------	N5M
5	16562-ZE6-000	SPRING, THROTTLE RETURN -----	1	-------- --------	N1,N4,N5M,SFL,SFL1,SFY,SFY1,T1AH
6	16570-ZE7-W10	CONTROL COMP. ----------	1	-------- --------	SFL,SFL1,SFY,SFY1
	16570-ZE7-772	----------	1	-------- --------	N5M
7	16570-ZE7-020	CONTROL ASSY. ----------	1	-------- --------	N1,N4,T1AH
8	16573-ZE7-000	ROD, CHOKE ----------	1	-------- --------	N1,N4,N5M,SFL,SFL1,SFY,SFY1,T1AH
9	16576-ZE7-300	SPRING, LEVER ----------	1	-------- --------	N1,N4,N5M,SFL,SFL1,SFY,SFY1,T1AH
10	16576-891-000	HOLDER, CABLE ----------	1	-------- --------	N1,N4,N5M,SFL,SFL1,SFY,SFY1,T1AH
11	16584-883-300	SPRING, CONTROL ADJUSTING ---	2	-------- --------	N1,N4,N5M,SFL,SFL1,SFY,SFY1,T1AH
12	16585-ZE7-000	PROTECTOR, CONTROL ----------	1	-------- --------	N1,N4,N5M,SFL,SFL1,SFY,SFY1,T1AH
13	16599-ZG1-M10	COLLAR, STOPPER ----------	1	-------- --------	SFL,SFL1,SFY,SFY1
14	36100-ZE7-013	SWITCH ASSY., ENGINE STOP ---	1	-------- --------	N1,N4,N5M,SFL,SFL1,SFY,SFY1,T1AH
15	36101-ZE7-020	CORD, STOP SWITCH ----------	1	-------- --------	N1,N4,N5M,SFL,SFL1,SFY,SFY1,T1AH
16	36103-ZE1-000	HOLDER, STOP SWITCH CORD ----	1	-------- --------	N1,N4,N5M,SFL,SFL1,SFY,SFY1,T1AH
17	46392-SC2-003	CLAMP, BRAKE PIPE (GRAY) ----	1	-------- --------	N1,N4,N5M,SFL,SFL1,SFY,SFY1,T1AH
18	90013-883-000	BOLT, FLANGE, 6X12(CT200) ---	2	-------- --------	N1,N4,N5M,SFL,SFL1,SFY,SFY1,T1AH
19	90015-ZE5-010	BOLT, GOVERNOR ARM ----------	1	-------- --------	N1,N4,N5M,SFL,SFL1,SFY,SFY1,T1AH
20	90016-ZE7-W00	SCREW, RECESSED, 5X28 -------	1	-------- --------	SFL,SFL1,SFY,SFY1
21	90659-680-013	CLIP, WIRE HARNESS ----------	1	-------- --------	N1,N4,N5M,SFL,SFL1,SFY,SFY1,T1AH
22	93500-04008-0A	SCREW, PAN, 4X8 ----------	1	-------- --------	N1,N4,N5M,SFL,SFL1,SFY,SFY1,T1AH
23	93500-05016-0A	SCREW, PAN, 5X16 ----------	1	-------- --------	N1,N4,N5M,SFL,SFL1,SFY,SFY1,T1AH

CONTROL(1)

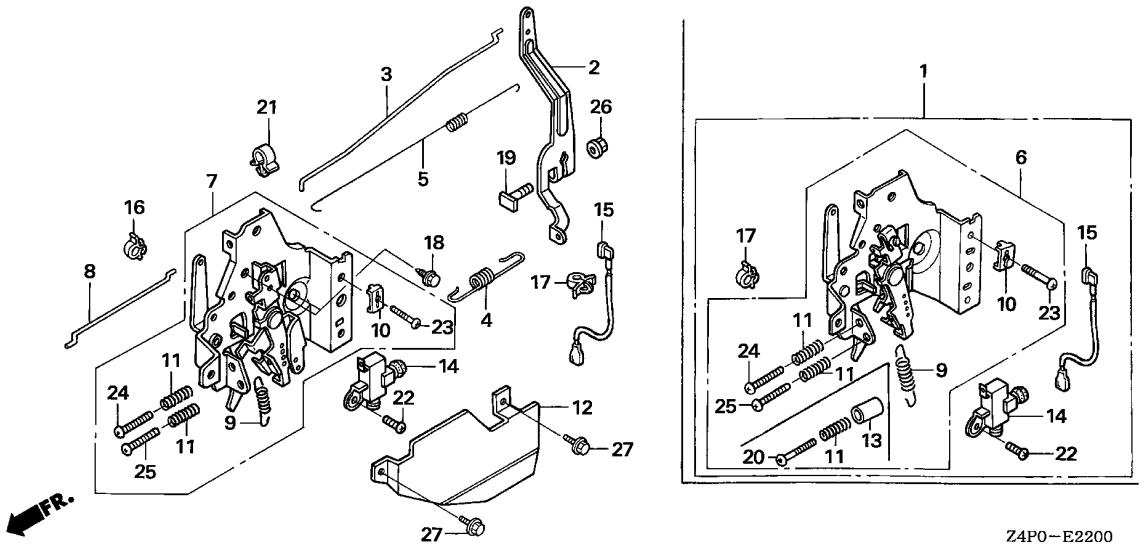

Ref. No.	Part No.	Description	Reqd. QTY GXV 160 UH2	Serial No.	Parts catalogue code
24	93500-05020-0A	SCREW, PAN, 5X20	1	-------- --------	N1,N4,N5M,SFL,SFL1,SFY,SFY1,T1AH
25	93500-05028-0A	SCREW, PAN, 5X28	1	-------- --------	N1,N4,N5M,T1AH
26	94050-06000	NUT, FLANGE, 6MM	1	-------- --------	N1,N4,N5M,SFL,SFL1,SFY,SFY1,T1AH
27	95701-06010-00	BOLT, FLANGE, 6X10	2	-------- --------	N1,N4,N5M,SFL,SFL1,SFY,SFY1,T1AH

E-22-1 CONTROL(2)

D 5

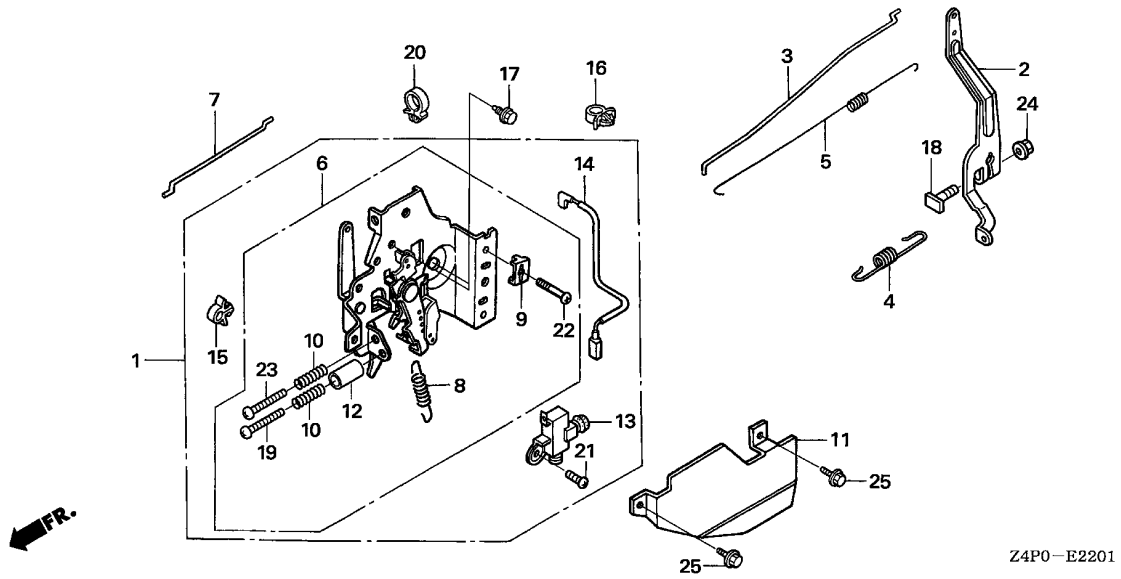

Ref. No.	L.O.N.	(Relative ref. Number) Description	F.R.T.
1		(6)	
	1161A5	CONTROL, THROTTLE/GOVERNOR ---	0.3
2	1161A0	ARM, GOVERNOR ----------	0.3
3	1161B1	ROD, GOVERNOR ----------	0.3
4	1161C5	SPRING, GOVERNOR ----------	0.2
5	1161C2	SPRING, THROTTLE RETURN ------	0.3
7	8101R5	ROD, GOVERNOR CHOKE CONTROL --	0.2
8	1161E4	SPRING, LEVER(A) ----------	0.2
13	6151K1	SWITCH, THROTTLE/GOVERNOR ENGINE STOP ----------	0.2
14	6111B3	CORD, STOP SWITCH ----------	0.2

Ref. No.	Part No.	Description	Reqd. QTY GXV 160 UH2	Serial No.	Parts catalogue code
1	16500-ZE7-W11	CONTROL ASSY. (EN)(STD.) ----	1	-------- --------	N1F,N15,N45,N55
2	16551-ZE7-000	ARM, GOVERNOR ----------	1	-------- --------	A1S,A1SA,A14,N1F,N15,N45,N55
3	16555-ZE7-000	ROD, GOVERNOR ----------	1	-------- --------	A1S,A1SA,A14,N1F,N15,N45,N55
4	16561-ZE7-020	SPRING, GOVERNOR ----------	1	-------- --------	A1S,A1SA,A14,N1F,N15,N45,N55
5	16562-ZE6-000	SPRING, THROTTLE RETURN -----	1	-------- --------	A1S,A1SA,A14,N1F,N15,N45,N55
6	16570-ZE7-W00	CONTROL COMP. (STD.) --------	1	-------- --------	A14,N1F,N15,N45,N55
	16570-ZE7-W20	CONTROL COMP. (EN)(BRILL) ---	1	-------- --------	A1S,A1SA
7	16573-ZE7-000	ROD, CHOKE ----------	1	-------- --------	A1S,A1SA,A14,N1F,N15,N45,N55
8	16576-ZE7-300	SPRING, LEVER ----------	1	-------- --------	A1S,A1SA,A14,N1F,N15,N45,N55
9	16576-891-000	HOLDER, CABLE ----------	1	-------- --------	A1S,A1SA,A14,N1F,N15,N45,N55
10	16584-883-300	SPRING, CONTROL ADJUSTING ---	2	-------- --------	A1S,A1SA,A14,N1F,N15,N45,N55
11	16585-ZE7-000	PROTECTOR, CONTROL ----------	1	-------- --------	A1S,A1SA,N1F,N15,N45,N55
12	16599-ZG1-M10	COLLAR, STOPPER ----------	1	-------- --------	A1S,A1SA,A14,N1F,N15,N45,N55
13	36100-ZE7-013	SWITCH ASSY., ENGINE STOP ---	1	-------- --------	N1F,N15,N45,N55
14	36101-ZE7-020	CORD, STOP SWITCH ----------	1	-------- --------	N1F,N15,N45,N55
15	36103-ZE1-000	HOLDER, STOP SWITCH CORD ----	1	-------- --------	N1F,N15,N45,N55
16	46392-SC2-003	CLAMP, BRAKE PIPE (GRAY) ----	1	-------- --------	N1F,N15,N45,N55
17	90013-883-000	BOLT, FLANGE, 6X12(CT200) ---	2	-------- --------	A1S,A1SA,A14,N1F,N15,N45,N55
18	90015-ZE5-010	BOLT, GOVERNOR ARM ----------	1	-------- --------	A1S,A1SA,A14,N1F,N15,N45,N55
19	90016-ZE7-W00	SCREW, RECESSED, 5X28 -------	1	-------- --------	A1S,A1SA,A14,N1F,N15,N45,N55
20	90659-680-013	CLIP, WIRE HARNESS ----------	1	-------- --------	A1S,A1SA,A14,N1F,N15,N45,N55
21	93500-04008-0A	SCREW, PAN, 4X8 ----------	1	-------- --------	N1F,N15,N45,N55
22	93500-05016-0A	SCREW, PAN, 5X16 ----------	1	-------- --------	A1S,A1SA,A14,N1F,N15,N45,N55
23	93500-05020-0A	SCREW, PAN, 5X20 ----------	1	-------- --------	A1S,A1SA,A14,N1F,N15,N45,N55
24	94050-06000	NUT, FLANGE, 6MM ----------	1	-------- --------	A1S,A1SA,A14,N1F,N15,N45,N55
25	95701-06010-00	BOLT, FLANGE, 6X10 ----------	2	-------- --------	A1S,A1SA,N1F,N15,N45,N55

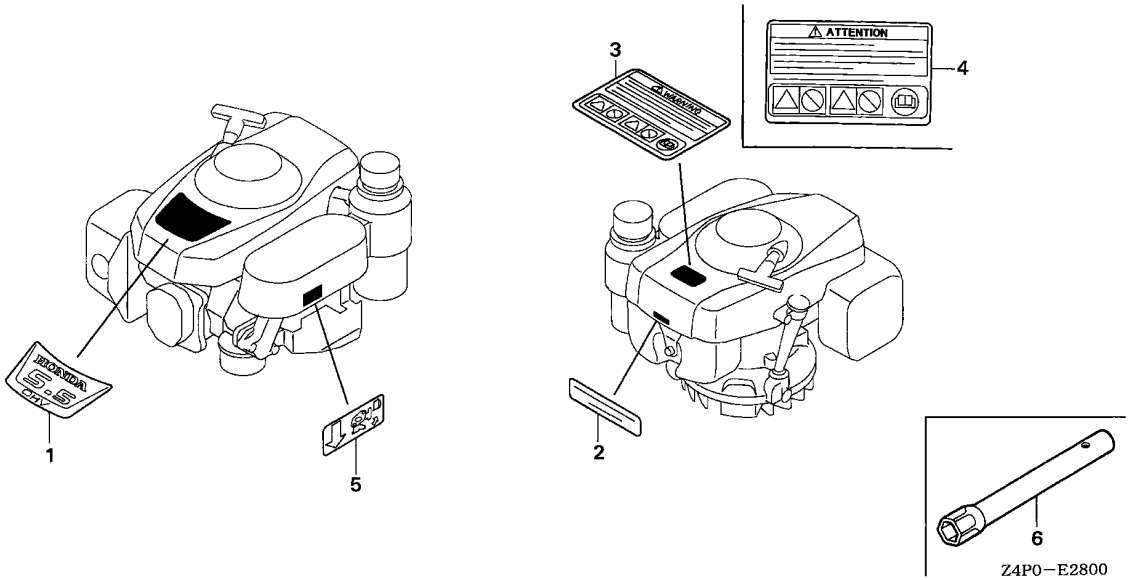

Ref. No.	L.O.N.	(Relative ref. Number) Description	F.R.T.
		NO INFORMATION ----------	

Ref. No.	Part No.	Description	Reqd. QTY GXV 160 UH2	Serial No.	Parts catalogue code
1	87101-Z1V-000	MARK, EMBLEM ----------	1		
2	87504-Z1V-000	MARK, MANUFACTURER ----------	1		
3	87516-Z4N-000	MARK, OPERATOR CAUTION (ENGLISH)(MADE IN CHINA)	1		
	87516-Z4N-810	MARK, OPERATOR CAUTION (FRENCH)(MADE IN CHINA)	(1)		
4	87516-Z4N-800	MARK, OPERATOR CAUTION (PICTOGRAPH)(MADE IN CHINA)	1		
5	87524-Z1V-000	MARK, FUEL COCK CAUTION -----	1		
6	99004-21002	WRENCH, BOX (P21) ----------	1	-------- --------	SFL1,SFY,SFY1
	99004-21003	----------	1	-------- --------	N1,N15,N4,N45,N5M,N55,T1AH

BLADE HOLDER

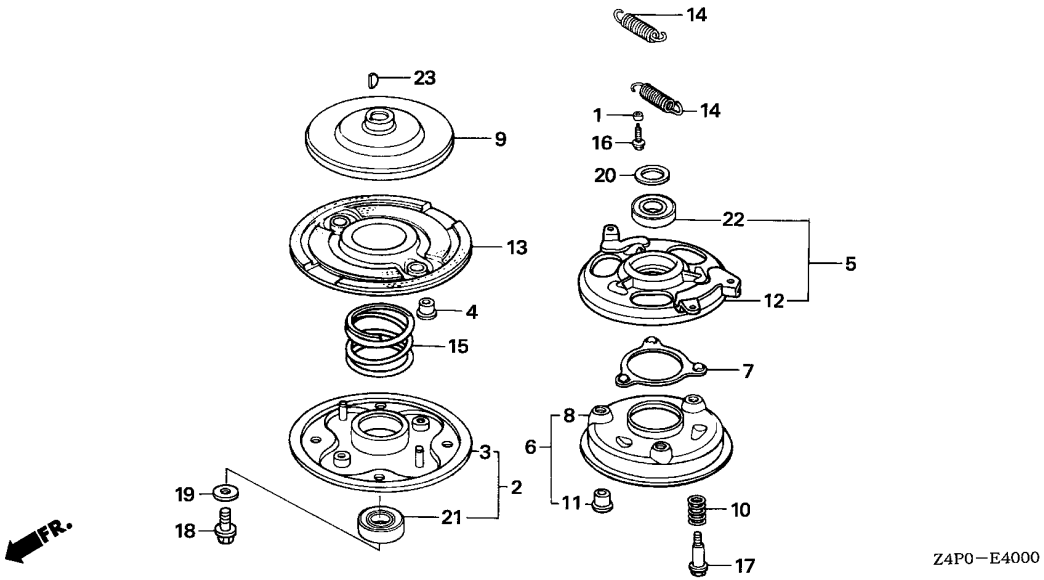

Ref. No.	L.O.N.	(Relative ref. Number) Description	F.R.T.
		NO INFORMATION ----------	

Ref. No.	Part No.	Description	Reqd. QTY GXV 160 UH2	Serial No.		Parts catalogue code
1	19512-883-000	COLLAR, FAN ----------	2	--------	--------	SFL1,SFY1
2	72600-VA4-010	HOLDER ASSY., BLADE ---------	1	--------	--------	SFL1,SFY1
3	72610-VA4-000	HOLDER COMP., BLADE ---------	1	--------	--------	SFL1,SFY1
4	72613-VA4-000	BUSH, BLADE HOLDER ----------	2	--------	--------	SFL1,SFY1
5	75090-VA4-030	PLATE ASSY., BALL CONTROL ---	1	--------	--------	SFL1,SFY1
6	75100-VA4-010	BRAKE COMP. ----------	1	--------	--------	SFL1,SFY1
7	75110-VA4-000	RETAINER COMP., BALL --------	1	--------	--------	SFL1,SFY1
8	75120-VA4-010	DISK, BRAKE ----------	1	--------	--------	SFL1,SFY1
9	75130-VA4-000	DISK, DRIVE ----------	1	--------	--------	SFL1,SFY1
10	75132-VA4-000	SPRING, BRAKE HOLDER --------	3	--------	--------	SFL1,SFY1
11	75133-VA4-000	BUSH, BRAKE HOLDER ----------	3	--------	--------	SFL1,SFY1
12	75140-VA4-020	PLATE COMP., BALL CONTROL ---	1	--------	--------	SFL1,SFY1
13	75150-VA3-J01	DISK COMP., DRIVEN ----------	1	--------	--------	SFL1,SFY1
14	75182-VA3-J00	SPRING, CLUTCH RETURN (53.0MM)	2	--------	--------	SFL1,SFY1
15	75183-VA3-J00	SPRING, CLUTCH (36.6MM) -----	1	--------	--------	SFL1,SFY1
16	90014-952-000	BOLT, FLANGE, 6X14(CT200) ---	4	--------	--------	SFL1,SFY1
17	90021-VA4-000	BOLT, SPECIAL, 6MM ----------	3	--------	--------	SFL1,SFY1
18	90105-960-003	BOLT, HEX., 10X25 ----------	1	--------	--------	SFL1,SFY1
19	90409-952-000	WASHER, 10MM ----------	1	--------	--------	SFL1,SFY1
20	90501-952-010	WASHER, THRUST ----------	1	--------	--------	SFL1,SFY1
21	91102-VA4-013	BEARING, RADIAL BALL, 6204 --	1	--------	--------	SFL1,SFY1
22	91103-VA4-003	BEARING, RADIAL BALL, 60/22 -	1	--------	--------	SFL1,SFY1
23	94401-16150	KEY, WOODRUFF, 16X15 --------	1	--------	--------	SFL1,SFY1

PART NO. INDEX

E 1

Part Number	Address	Page	Ref.
06000			
06180-ZE6-820	C15	30	1
11000			
11300-Z1V-000	C2	17	1
11300-Z1V-800	C2	17	2
11300-Z1V-U90	C2	17	1
11300-Z1V-V50	C2	17	1
11381-ZE7-M10	C2	17	3
12000			
12000-Z1V-000	C2	17	4
12000-Z2J-000	C2	17	4
12125-Z1V-000	C2	17	5
12126-Z1V-000	C2	17	6
12126-Z1V-800	C2	17	6
12204-ZE1-306	C1	16	1
12205-ZE1-315	C1	16	2
12209-ZE6-003	C7	22	1
12210-Z1V-000	C1	16	3
12216-ZE5-300	C1	16	4
12251-ZE7-000	C1	16	5
12311-ZG9-800	C1	16	6
12355-Z1V-000	C2	17	7
12367-883-003	C2	17	8
12372-ZE7-000	C2	17	9
12373-ZE7-000	C2	17	10
12391-ZE7-M10	C1	16	7
13000			
13010-ZL0-003	C5	20	1
13010-ZL0-004	C5	20	1
13011-ZL0-003	C5	20	1
13011-ZL0-004	C5	20	1
13012-ZL0-003	C5	20	1
13012-ZL0-004	C5	20	1
13013-ZL0-003	C5	20	1
13013-ZL0-004	C5	20	1
13101-Z1T-000	C5	20	2
13102-ZE7-020	C5	20	2
13103-ZE7-020	C5	20	2
13104-ZE7-020	C5	20	2
13111-Z1T-000	C5	20	3
13200-Z1V-000	C5	20	4
13310-ZE7-010	C5	20	7
13310-ZE7-641	C5	20	8
13310-ZE7-661	C5	20	9
13310-ZE7-771	C5	20	10
13310-ZE7-U41	C5	20	5
13310-ZE7-V20	C5	20	6
13331-357-000	D1	32	1
	D2	33	1

Part Number	Address	Page	Ref.
14000			
14100-ZE7-000	C7	22	2
14100-ZE7-770	C7	22	2
14410-ZE1-010	C7	22	3
14431-ZE1-000	C7	22	4
14441-ZE1-010	C7	22	5
14451-ZE1-013	C7	22	6
14568-ZE1-000	C7	22	7
14711-ZF1-000	C7	22	8
14721-ZE7-000	C7	22	9
14751-ZE1-000	C7	22	10
14771-ZE1-000	C7	22	11
14791-ZE1-010	C7	22	12
15000			
15335-ZE7-000	C2	17	11
15620-ZE6-810	C2	17	12
15630-ZE6-810	C2	17	13
15721-ZE7-000	C14	29	1
16000			
16010-ZE0-025	C12	27	1
16011-ZE0-005	C12	27	2
16013-ZE0-005	C12	27	3
16015-ZE0-831	C12	27	4
16016-ZH7-W01	C12	27	5
16024-ZE1-811	C12	27	6
16028-ZE0-005	C12	27	7
16045-ZE7-005	C12	27	8
16100-Z1V-003	C12	27	9
16100-Z1V-J71	C12	27	9
16124-ZE0-005	C12	27	10
16166-Z1V-003	C12	27	11
16166-Z1V-J71	C12	27	11
16211-ZE7-000	C12	27	12
16212-ZE7-M10	C12	27	13
16220-ZE6-010	C12	27	14
16221-ZE7-M11	C12	27	15
16500-ZE7-W11	D5	36	1
16500-ZE7-W31	D3	34	1
16510-ZE6-000	C2	17	14
16515-ZE6-010	C2	17	15
16525-ZE6-010	C2	17	16
16531-Z1T-000	C2	17	17
16541-ZE7-000	C2	17	18
16551-ZE7-000	D3	34	2
	D5	36	2
16555-ZE7-000	D3	34	3
	D5	36	3
16561-ZE7-020	D3	34	4
	D5	36	4
16561-ZE7-711	D3	34	4
16562-ZE6-000	D3	34	5
	D5	36	5
16570-ZE7-020	D3	34	7
16570-ZE7-772	D3	34	6

Part Number	Address	Page	Ref.
16570-ZE7-W00	D5	36	6
16570-ZE7-W10	D3	34	6
16570-ZE7-W20	D5	36	6
16573-ZE7-000	D3	34	8
	D5	36	7
16576-891-000	D3	34	10
	D5	36	9
16576-ZE7-300	D3	34	9
	D5	36	8
16584-883-300	D3	34	11
	D5	36	10
16585-ZE7-000	D3	34	12
	D5	36	11
16599-ZG1-M10	D3	34	13
	D5	36	12
16854-ZH8-000	C16	31	1
16952-Z1V-000	C16	31	2
16953-ZE1-812	C12	27	16
16954-ZE1-812	C12	27	17
16956-ZE1-811	C12	27	18
16957-ZE1-812	C12	27	19
17000			
17210-Z1V-003	C14	29	2
17218-888-003	C14	29	3
17220-Z1V-000	C14	29	4
17231-Z1V-000	C14	29	5
17232-891-000	C14	29	6
17238-ZE7-710	C14	29	7
17239-ZE6-300	C14	29	8
17240-ZE6-000	C2	17	19
17506-ZE7-000	C16	31	3
17510-Z1V-010	C16	31	4
17512-ZE7-000	C16	31	5
17516-896-700	C16	31	6
17518-Z1V-000	C16	31	7
17519-Z1V-000	C16	31	8
17532-Z1V-000	C16	31	9
17560-Z1V-000	C2	17	20
17620-Z1V-000	C16	31	10
17622-888-010	C16	31	11
17624-ZE7-000	C16	31	12
17636-Z1V-010	C16	31	13
18000			
18292-ZE7-M10	C15	30	2
18310-Z1V-000	C15	30	3
18320-Z1V-000	C15	30	4
18355-888-810	C15	30	5
18381-Z1V-000	C15	30	7
18381-ZE6-820	C15	30	6
19000			
19511-Z1T-000	D1	32	2
19512-883-000	D7	38	1
19610-Z1V-000ZA	C11	26	1

Part Number	Address	Page	Ref.
19610-Z1V-000ZB	C11	26	1
23000			
23411-ZE7-000	C2	17	21
23421-ZE6-000	C3	18	22
28000			
28400-Z1V-003ZA	C10	25	1
28400-Z1V-003ZB	C10	25	1
28400-Z1V-801ZA	C10	25	1
28400-Z1V-801ZB	C10	25	1
28410-Z1V-003ZA	C10	25	2
28410-Z1V-003ZB	C10	25	2
28420-Z1V-003	C10	25	3
28422-ZH8-801	C10	25	4
28431-ZH8-801	C10	25	5
28433-ZH8-801	C10	25	6
28441-ZH8-801	C10	25	7
28442-ZH8-003	C10	25	8
28443-ZH8-801	C10	25	9
28450-Z1V-000	D1	32	3
	D2	33	2
28461-ZE1-003	C10	25	10
28461-ZH8-003	C10	25	11
28462-Z1V-801	C10	25	12
28462-ZH8-003	C10	25	12
30000			
30500-Z1V-003	C11	26	2
30700-Z1V-003	C11	26	3
30701-883-000	D2	33	3
31000			
31110-Z1V-003	D1	32	4
31110-Z1V-810	D1	32	5
	D2	33	4
32000			
32195-Z1V-810	D2	33	5
35000			
35120-Z1V-811	D2	33	6
35129-Z1V-811	D2	33	7
36000			
36100-ZE7-013	D3	34	14
	D5	36	13
36101-ZE7-020	D3	34	15
	D5	36	14
36103-ZE1-000	D3	34	16
	D5	36	15

Part Number	Address	Page	Ref.
43000			
43140-Z1V-000	D2	33	8
43143-Z1V-000	C3	18	23
43145-ZE7-003	D2	33	9
46000			
46392-SC2-003	D3	34	17
	D5	36	16
72000			
72600-VA4-010	D7	38	2
72610-VA4-000	D7	38	3
72613-VA4-000	D7	38	4
75000			
75090-VA4-030	D7	38	5
75100-VA4-010	D7	38	6
75110-VA4-000	D7	38	7
75112-ZE6-000	D2	33	10
75113-ZE6-000	D2	33	11
75120-VA4-010	D7	38	8
75120-ZE6-013	D2	33	12
75130-VA4-000	D7	38	9
75130-ZE7-000	D2	33	13
75132-VA4-000	D7	38	10
75133-VA4-000	D7	38	11
75140-VA4-020	D7	38	12
75150-VA3-J01	D7	38	13
75182-VA3-J00	D7	38	14
75183-VA3-J00	D7	38	15
80000			
80103-MG2-000	C16	31	14
87000			
87101-Z1V-000	D6	37	1
87504-Z1V-000	D6	37	2
87516-Z4N-000	D6	37	3
87516-Z4N-800	D6	37	4
87516-Z4N-810	D6	37	3
87524-Z1V-000	D6	37	5
90000			
90001-ZE1-000	C6	21	11
90003-ZH8-801	C10	25	13
90010-GE0-710	C16	31	15
90012-ZE0-010	C7	22	13
90013-883-000	C1	16	8
	C3	18	24
	D3	34	18
	D5	36	17
90014-952-000	C1	16	9

3

PART NO. INDEX

E 2

Part Number	Address	Page	Ref.
90014-952-000	C3	18	25
	D7	38	16
90014-Z1V-000	C16	31	16
90015-883-000	C11	26	4
90015-ZE5-010	D3	34	19
	D5	36	18
90015-ZE6-000	D2	33	14
90016-Z1V-000	C16	31	17
90016-ZE7-W00	D3	34	20
	D5	36	19
90017-883-000	C3	18	26
90018-ZE1-000	D2	33	15
90021-VA4-000	D7	38	17
90022-888-010	C3	18	27
90043-ZE6-000	C1	16	10
90048-ZC3-000	C1	16	11
90105-960-003	D7	38	18
90131-ZE1-000	C3	18	28
90201-Z1T-000	D1	32	6
	D2	33	16
90206-ZE1-000	C7	22	14
90300-Z1V-000	C14	29	9
90343-ZE6-000	C15	30	8
90401-ZE7-W00	C6	21	12
90409-952-000	D7	38	19
90451-ZE1-000	C3	18	29
90452-166-600	C3	18	30
90452-187-000	C3	18	31
90455-896-700	C16	31	18
90501-952-010	D7	38	20
90505-MCT-000	D2	33	17
90551-ZE1-000	C6	21	13
90581-Z1V-000	C11	26	5
90601-ZE1-000	C3	18	32
90602-ZE1-000	C3	18	33
90653-723-000	D2	33	18
90659-680-013	D3	34	21
	D5	36	20
90701-ZE6-000	C3	18	34
90702-ZE6-000	D2	33	19
90741-ZV4-000	C6	21	14
91000			
91102-VA4-013	D7	38	21
91103-VA4-003	D7	38	22
91205-Z1V-003	C3	18	35
91231-Z1V-003	C3	18	36
91251-Z1V-003	C3	18	37
91252-Z1V-003	C3	18	38
91301-Z1V-003	C3	18	39
91302-Z1V-003	C3	18	40
93000			
93500-03006-1H	C12	27	20
93500-04008-0A	D2	33	20
	D3	34	22
	D5	36	21
93500-05016-0A	C3	18	41
	D3	34	23
	D5	36	22
93500-05020-0A	D4	35	24
	D5	36	23
93500-05028-0A	D4	35	25
94000			
94050-06000	C14	29	10
	C16	31	19
	D4	35	26
	D5	36	24
94101-06800	C3	18	42
94102-12800	D2	33	21
94103-06000	C16	31	20
94251-08000	C3	18	43
94301-08140	C3	18	44
94301-10160	C1	16	12
94401-16150	D7	38	23
95000			
95002-02080	C16	31	21
95002-70000	C16	31	22
95701-06008-00	C10	25	14
95701-06010-00	D4	35	27
	D5	36	25
95701-06012-08	C3	18	45
95701-06035-00	C14	29	11
95701-08050-00	C1	16	13
	C4	19	46
96000			
96100-62050-00	C4	19	47
98000			
98079-54846	C1	16	14
98079-54855	C1	16	14
98079-55846	C1	16	14
98079-55855	C1	16	14
98079-56846	C1	16	14
98079-56855	C1	16	14
99000			
99004-21002	D6	37	6
99004-21003	D6	37	6
99101-ZH8-0600	C12	27	21
99101-ZH8-0620	C12	27	21
99101-ZH8-0650	C13	28	21
99101-ZH8-0680	C13	28	21
99204-ZE0-0350	C13	28	22

3

PART NAME INDEX

F 1

Part name	Address	Page	Ref.
[A]			
ARM, GOVERNOR	D3	34	2
	D5	36	2
ARM, VALVE ROCKER	C7	22	4
ARRESTER KIT, SPARK	C15	30	1
ARRESTER, SPARK	C15	30	5
[B]			
BARREL ASSY., CYLINDER	C2	17	4
BASE COMP., BRAKE	D2	33	13
BASE COMP., HOLDER	C3	18	23
BEARING, RADIAL BALL, 60/22	D7	38	22
BEARING, RADIAL BALL, 6204	D7	38	21
BEARING, RADIAL BALL, 6205	C4	19	47
BOLT, CONNECTING ROD	C6	21	11
BOLT, DRAIN PLUG	C3	18	28
BOLT, FLANGE, 6MM	D2	33	14
BOLT, FLANGE, 6X10	D4	35	27
	D5	36	25
BOLT, FLANGE, 6X12	C1	16	8
	C3	18	24
			45
	D3	34	18
	D5	36	17
BOLT, FLANGE, 6X14	C1	16	9
	C3	18	25
	D7	38	16
BOLT, FLANGE, 6X20	C3	18	27
BOLT, FLANGE, 6X23	D2	33	15
BOLT, FLANGE, 6X28	C11	26	4
BOLT, FLANGE, 6X32	C3	18	26
BOLT, FLANGE, 6X35	C14	29	11
BOLT, FLANGE, 6X47	C16	31	16
BOLT, FLANGE, 6X8	C10	25	14
BOLT, FLANGE, 8X50	C1	16	13
	C4	19	46
BOLT, GOVERNOR ARM	D3	34	19
	D5	36	18
BOLT, HEX., 10X25	D7	38	18
BOLT, PIVOT, 8MM	C7	22	13
BOLT, SPECIAL, 6MM	D7	38	17
BOLT, STUD, 6X109	C1	16	10
BOLT, STUD, 6X85	C1	16	11
BOLT, TANK STAY	C16	31	17
BRAKE COMP.	D2	33	12
	D7	38	6
BUSH, BLADE HOLDER	D7	38	4
BUSH, BRAKE HOLDER	D7	38	11
[C]			
CAMSHAFT ASSY.	C7	22	2
CAM COMP., BRAKE	D2	33	8
CAP ASSY., FUEL TANK	C16	31	10
CAP ASSY., NOISE SUPPRESSOR	C11	26	3
CARBURETOR ASSY.	C12	27	9
CASE COMP., AIR CLEANER	C14	29	4
CASE COMP., RECOIL STARTER	C10	25	2
CHAMBER SET, FLOAT	C12	27	4
CHOKE SET	C12	27	8
CLAMP, BRAKE PIPE	D3	34	17
	D5	36	16
CLAMP, PIPE	D2	33	17
CLIP, GOVERNOR HOLDER	C3	18	33
CLIP, HIGH TENSION CORD	D2	33	3
CLIP, PISTON PIN, 18MM	C6	21	13
CLIP, TUBE	C16	31	15
			21
			22
CLIP, VALVE GUIDE	C1	16	4
CLIP, WIRE HARNESS	D3	34	21
	D5	36	20
COIL ASSY., IGNITION	C11	26	2
COLLAR B, AIR CLEANER	C14	29	8
COLLAR COMP., TANK	C16	31	8
COLLAR, AIR CLEANER	C14	29	7
COLLAR, EXTENSION	C2	17	19
COLLAR, FAN	D7	38	1
COLLAR, STOPPER	D3	34	13
	D5	36	12
COLLAR, TANK SET	C16	31	7
CONTROL ASSY.	D3	34	1
			7
	D5	36	1
CONTROL COMP.	D3	34	6
	D5	36	6
CORD, STOP SWITCH	D2	33	5
	D3	34	15
	D5	36	14
COVER COMP., BREATHER	C2	17	7
COVER COMP., FAN	C11	26	1
COVER, AIR CLEANER	C14	29	5
COVER, HEAD	C1	16	6
CRANKSHAFT COMP.	C5	20	5
			6
			7
			8
			9
			10
CUSHION, RR. FENDER	C16	31	14
[D]			
DISK COMP., DRIVEN	D7	38	13
DISK, BRAKE	D7	38	8
DISK, DRIVE	D7	38	9
DOWEL PIN, 10X16	C1	16	12
DOWEL PIN, 8X14	C3	18	44
DOWEL PIN, 8X9	D2	33	19
[E]			
ELEMENT, AIR CLEANER	C14	29	2
E-RING, 10MM	D2	33	18
EXTENSION, OIL FILLER	C2	17	13
[F]			
FAN, COOLING	D1	32	2
FILTER, BREATHER	C2	17	8
FILTER, OUTER	C14	29	3
FLOAT SET	C12	27	3
FLYWHEEL COMP.	D1	32	4
			5
	D2	33	4
[G]			
GASKET SET	C12	27	1
GASKET, CYLINDER HEAD	C1	16	5
GASKET, MUFFLER	C15	30	6
			7
GAUGE COMP., OIL LEVEL	C2	17	12
GAUGE, FUEL LEVEL	C16	31	13
GEAR, DRIVEN	C3	18	22
GOVERNOR ASSY.	C2	17	14
GRIP, STARTER	C10	25	11
GROMMET, AIR CLEANER	C14	29	6
GUIDE, EX. VALVE	C1	16	2
GUIDE, IN. VALVE	C1	16	1
GUIDE, RATCHET	C10	25	6
[H]			
HEAD COMP., CYLINDER	C1	16	3
HOLDER ASSY., BLADE	D7	38	2
HOLDER COMP., BLADE	D7	38	3
HOLDER, CABLE	D3	34	10
	D5	36	9
HOLDER, STOP SWITCH CORD	D3	34	16
	D5	36	15
[I]			
INSULATOR, CARBURETOR	C12	27	12
[J]			
JET SET, PILOT,	C13	28	22
JET, MAIN,	C12	27	21
	C13	28	21
[K]			
KEY, SPECIAL WOODRUFF, 25X18	D1	32	1
	D2	33	1
KEY, SPECIAL, 16X15	C6	21	14
KEY, WOODRUFF, 16X15	D7	38	23
KNOB, RECOIL STARTER	C10	25	10
[L]			
LEVER, COCK	C12	27	16
LIFTER, VALVE	C7	22	5

4

PART NAME INDEX

F 2

Part name	Address	Page	Ref.
[M]			
MARK, EMBLEM	D6	37	1
MARK, FUEL COCK CAUTION	D6	37	5
MARK, MANUFACTURER	D6	37	2
MARK, OPERATOR CAUTION	D6	37	3
			4
MUFFLER COMP.	C15	30	3
[N]			
NOZZLE, MAIN	C12	27	11
NUT, AIR CLEANER	C14	29	9
NUT, FLANGE, 6MM	C14	29	10
	C16	31	19
	D4	35	26
	D5	36	24
NUT, PIVOT ADJUSTING	C7	22	14
NUT, SELF-LOCK, 6MM	C15	30	8
NUT, SPECIAL, 14MM	D1	32	6
	D2	33	16
[O]			
OIL SEAL, 12X20X6.5	C3	18	35
OIL SEAL, 25X38X7	C3	18	37
OIL SEAL, 25.4X40X7	C3	18	38
OIL SEAL, 6X11X4	C3	18	36
O-RING, 22.1X2.2	C3	18	39
O-RING, 25.5X3	C3	18	40
[P]			
PACKING, BREATHER COVER	C2	17	10
PACKING, CARBURETOR	C12	27	15
PACKING, FUEL CAP	C16	31	12
PACKING, FUEL COCK	C12	27	19
PACKING, HEAD COVER	C1	16	7
PACKING, INSULATOR	C12	27	13
PACKING, OIL PAN	C2	17	3
PACKING, PROTECTOR	C15	30	2
PAN ASSY., OIL	C2	17	1
			2
PIN, LOCK, 2.0	C3	18	34
PIN, LOCK, 8MM	C3	18	43
PIN, PISTON	C5	20	3
PISTON	C5	20	2
PIVOT, ROCKER ARM	C7	22	6
PLATE ASSY., BALL CONTROL	D7	38	5
PLATE A, GUIDE	C2	17	6
PLATE COMP., BALL CONTROL	D7	38	12
PLATE, FRICTION	C10	25	5
PLATE, GOVERNOR SHAFT HOLDER	C2	17	16
PLATE, GUIDE	C2	17	5
PLATE, LEVER SETTING	C12	27	17
PLATE, PUSH ROD GUIDE	C7	22	12
PLUG, SPARK	C1	16	14
PROTECTOR COMP., MUFFLER	C15	30	4
PROTECTOR, CONTROL	D3	34	12
PROTECTOR, CONTROL	D5	36	11
PULLEY COMP., STARTER	D1	32	3
	D2	33	2
[R]			
RATCHET, STARTER	C10	25	4
REEL, RECOIL STARTER	C10	25	3
RETAINER COMP., BALL	D7	38	7
RETAINER, IN. VALVE SPRING	C7	22	11
RING SET, PISTON	C5	20	1
ROD ASSY., CONNECTING	C5	20	4
ROD, CHOKE	D3	34	8
	D5	36	7
ROD, GOVERNOR	D3	34	3
	D5	36	3
ROD, PUSH	C7	22	3
ROD, THROTTLE RETURN	D2	33	9
ROPE, RECOIL STARTER	C10	25	12
RUBBER B, TANK MOUNTING	C16	31	6
RUBBER, OIL RETURN	C2	17	11
RUBBER, SUPPORTER	C16	31	1
RUBBER, TANK MOUNTING	C16	31	9
RUBBER, TANK SETTING	C16	31	3
[S]			
SCREW SET	C12	27	7
SCREW SET, DRAIN	C12	27	6
SCREW SET, PILOT	C12	27	5
SCREW, PAN, 3X6	C12	27	20
SCREW, PAN, 4X8	D2	33	20
	D3	34	22
	D5	36	21
SCREW, PAN, 5X16	C3	18	41
	D3	34	23
	D5	36	22
SCREW, PAN, 5X20	D4	35	24
	D5	36	23
SCREW, PAN, 5X28	D4	35	25
SCREW, RECESSED, 5X28	D3	34	20
	D5	36	19
SCREW, SETTING	C10	25	13
SCREW, THROTTLE STOP	C12	27	10
SEAL, VALVE STEM	C7	22	1
SHAFT, DRIVE	C2	17	21
SHAFT, GOVERNOR ARM	C2	17	18
SHAFT, GOVERNOR HOLDER	C2	17	15
SLIDER, GOVERNOR	C2	17	17
SPACER COMP., CARBURETOR	C12	27	14
SPONGE, FUEL CAP BREATHER	C16	31	11
SPRING, BRAKE	D2	33	10
SPRING, BRAKE HOLDER	D7	38	10
SPRING, BRAKE RETURN	D2	33	11
SPRING, CLUTCH	D7	38	15
SPRING, CLUTCH RETURN	D7	38	14
SPRING, COCK LEVER	C12	27	18
SPRING, CONTROL ADJUSTING	D3	34	11
	D5	36	10
SPRING, FRICTION	C10	25	7
SPRING, GOVERNOR	D3	34	4
	D5	36	4
SPRING, LEVER	D3	34	9
	D5	36	8
SPRING, RECOIL STARTER	C10	25	8
SPRING, RETURN	C10	25	9
SPRING, SWITCH CONTROL	D2	33	7
SPRING, THROTTLE RETURN	D3	34	5
	D5	36	5
SPRING, VALVE	C7	22	10
SPRING, WEIGHT RETURN	C7	22	7
STARTER ASSY., RECOIL	C10	25	1
STAY COMP., TANK	C2	17	20
STRAINER, FUEL	C16	31	2
SWITCH ASSY., ENGINE STOP	D2	33	6
	D3	34	14
	D5	36	13
[T]			
TANK COMP., FUEL	C16	31	4
TUBE, BREATHER	C14	29	1
TUBE, FUEL	C16	31	5
[V]			
VALVE SET, FLOAT	C12	27	2
VALVE, BREATHER	C2	17	9
VALVE, EX.	C7	22	9
VALVE, IN.	C7	22	8
[W]			
WASHER, 10MM	D7	38	19
WASHER, 10X21	C3	18	31
WASHER, DRAIN PLUG, 10.2MM	C3	18	32
WASHER, PLAIN, 12MM	D2	33	21
WASHER, PLAIN, 6MM	C3	18	42
	C11	26	5
	C16	31	20
WASHER, TANK MOUNTING	C16	31	18
WASHER, THRUST	D7	38	20
WASHER, THRUST, 12MM	C3	18	30
WASHER, THRUST, 25.6MM	C6	21	12
WASHER, THRUST, 6MM	C3	18	29
WRENCH, BOX	D6	37	6

4

1 FOREWORD INDEX

2 ENGINE GROUP

3 PART NUMBER INDEX

4 PART NAME INDEX

HONDA

The Power of Dreams

E.Y A 120.2005.07

Published by Honda Motor Co., Ltd.
Printed in Japan

February 05, 2006

HONDA POWER PRODUCTS

PARTS CATALOGUE NEWS

Honda Motor Co., Ltd. Service Division

CODE NO.	BOOKLET TYPE	13Z4P601
	MICRO-FICHE	13Z4P6EA/FA
PARTS CATALOGUE TITLE	GXV160UH2	
NEWS NO.	001	

PARTS CATALOGUE - CORRECTED

Printed in Japan

Block No.	Ref. No.	Note	Part No.	Description	Reqd. QTY GXV 160 UH2	Serial No.	Parts catalogue code
E-14	3	L	16013-ZE0-005	FLOAT SET			
				(CARBURETOR NO.)	1	------- BE66J A	A1S, A1SA, A14, N1, N1F, N15, N4, N45, N55, SFL, SFL1, SFY, SFY1, T1AH
				(CARBURETOR NO.)	1	------- BE66M A	N5M
		D	16013-Z0S-B01	.....			
				(CARBURETOR NO.)	1	BE66N A	
	8	L	16045-ZE7-005	CHOKE SET			
				(CARBURETOR NO.)	1	------- BE66J A	A1S, A1SA, A14, N1, N1F, N15, N4, N45, N55, SFL, SFL1, SFY, SFY1, T1AH
				(CARBURETOR NO.)	1	------- BE66M A	N5M
		D	16044-ZE0-005	.....			
				(CARBURETOR NO.)	1	BE66N A	
	11	L	16166-Z1V-J71	NOZZLE, MAIN			
				(CARBURETOR NO.)	1	------- BE66M A	N5M
		L	16166-Z1V-003	.....			
				(CARBURETOR NO.)	1	------- BE66J A	A1S, A1SA, A14, N1, N1F, N15, N4, N45, N55, SFL, SFL1, SFY, SFY1, T1AH
		D	16166-Z1V-801	.....			
				(CARBURETOR NO.)	1	BE66N A	

NOTE A:PART NO.CHANGE D:NEWLY PROVIDED E:PART NO.DELETION K:REQUIRED NO.CORRECTION L:APPLICATION SERIAL NO.CORRECTION
T:APPLICATION CORRECTION Z:REMARKS CHANGE

BOOKNo.:13Z4P601

Block No.	Ref. No.	Note	Part No.	Description	Reqd.QTY GXV 160 UH2	Serial No.		Parts catalogue code
	21	L	99101-ZH8-0600	JET, MAIN, #60 (CARBURETOR NO.)	(1)	-------	BE66J A	A1S,A1SA,A14,N1,N1F,N15,N4,N45,N55,SFL,SFL1,SFY,SFY1,T1AH
		K	99101-ZH8-0650	JET, MAIN, #65 (CARBURETOR NO.)	1	-------	BE66J A	A1S,A1SA,A14,N1,N1F,N15,N4,N45,N55,SFL,SFL1,SFY,SFY1,T1AH
					(1)	-------	-------	N5M
				(CARBURETOR NO.)	(1)	BE66N A	-------	A1S,A1SA,A14,N1,N1F,N15,N4,N45,N55,SFL,SFL1,SFY,SFY1,T1AH
		D	99101-ZH8-0680	JET, MAIN, #68 (CARBURETOR NO.)	1	BE66N A	-------	A1S,A1SA,A14,N1,N1F,N15,N4,N45,N55,SFL,SFL1,SFY,SFY1,T1AH

NOTE A:PART NO.CHANGE D:NEWLY PROVIDED E:PART NO.DELETION K:REQUIRED NO.CORRECTION L:APPLICATION SERIAL NO.CORRECTION
T:APPLICATION CORRECTION Z:REMARKS CHANGE

May 29, 2006

HONDA POWER PRODUCTS

PARTS CATALOGUE NEWS

Honda Motor Co., Ltd. Service Division

CODE NO.	BOOKLET TYPE	13Z4P601
	MICRO-FICHE	13Z4P6EA/FA
PARTS CATALOGUE NEWS	GXV160UH2	
NEWS NO.	002	

PARTS CATALOGUE - CORRECTED

Printed in Japan

Block No.	Ref. No.	Note	Part No.	Description	Reqd.QTY GXV 160 UH2	Serial No.		Parts catalogue code
E-3	1	E	11300-Z1V-U90	*PARTS NO. DELETION				
		E	11300-Z1V-V50	*PARTS NO. DELETION				
		E	11300-Z1V-000	*PARTS NO. DELETION				
		D	11300-Z1V-406	PAN ASSY., OIL	1	-------	-------	A1S,A1SA,A14,N1,N1F,N15,N4,N45,N55,T1AH
		D	11300-Z1V-408	.....	1	-------	-------	N5M
		D	11300-Z1V-409	.....	1	-------	-------	SFY
	2	E	11300-Z1V-800	*PARTS NO. DELETION				
		D	11300-Z1V-407	PAN ASSY., OIL	1	-------	-------	SFL,SFL1,SFY1

NOTE A:PART NO.CHANGE D:NEWLY PROVIDED E:PART NO.DELETION K:REQUIRED NO.CORRECTION L:APPLICATION SERIAL NO.CORRECTION
T:APPLICATION CORRECTION Z:REMARKS CHANGE

September 10, 2006

HONDA POWER PRODUCTS

PARTS CATALOGUE NEWS

Honda Motor Co., Ltd. Service Division

CODE NO.	BOOKLET TYPE	13Z4P601
	MICRO-FICHE	13Z4P6EA/FA
PARTS CATALOGUE NEWS	GXV160UH2	
NEWS NO.	003	

PARTS CATALOGUE - CORRECTED

Printed in Japan

Block No.	Ref. No.	Note	Part No.	Description	Reqd. QTY GXV 160 UH2	Serial No.	Parts catalogue code

E-40 BLADE HOLDER

ILLUSTRATION CORRECTED

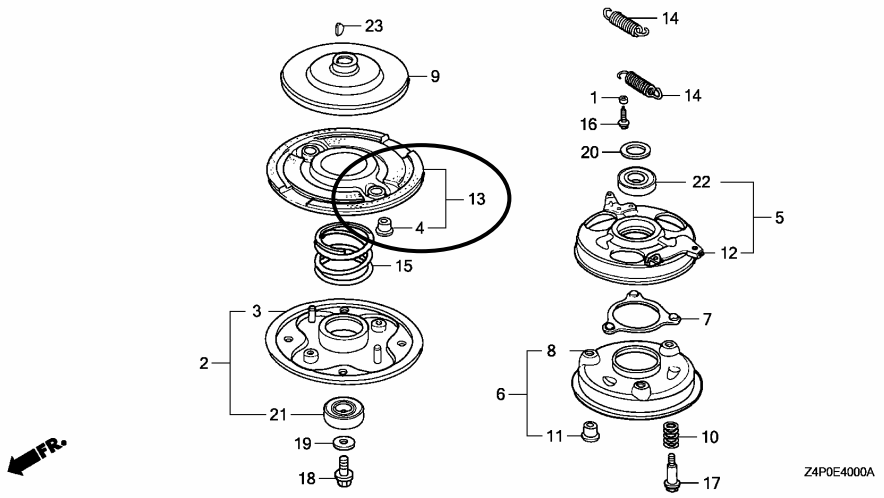

NOTE A:PART NO.CHANGE D:NEWLY PROVIDED E:PART NO.DELETION K:REQUIRED NO.CORRECTION L:APPLICATION SERIAL NO.CORRECTION
T:APPLICATION CORRECTION Z:REMARKS CHANGE

October 05, 2006

HONDA POWER PRODUCTS

PARTS CATALOGUE NEWS

Honda Motor Co., Ltd. Service Division

CODE NO.	BOOKLET TYPE	13Z4P601
	MICRO-FICHE	13Z4P6EA/FA
PARTS CATALOGUE NEWS	GXV160UH2	
NEWS NO.	004	

Printed in Japan

GXV160UH2-A1AS, A1T, A12, N1AH and N12 TYPES sales parts information

NOTE: This Parts Catalogue News explains only the parts of the different model that are produced to conform to addition of the GXV160UH2-A1AS, A1T, A12, N1AH and N12 types.
As for the parts not listed on this Parts Catalogue News, use the parts of the GXV160UH2-A1S, N1 and N1F types.

• Models, parts catalogue codes and applicable serial numbers

Model	Type		Parts catalogue type	Applicable engine serial No.	Applicable carburetor identification No.
GXV160UH2	A1S	Base type	A1S	GJABH-1000001~	BE66J A
	A1AS	Additional type	A1AS		BE66N A
	A1T		A1T		
	A12		A12		
	N1F	Base type	N1F		BE66J A
	N1AH	Additional type	N1AH		BE66N A
	N1	Base type	N1		BE66J A
	N12	Additional type	N12		BE66N A

• Features of each type

Specifications	Model / Type	Base type	Additional type	Base type	Additional type	Base type	Additional type	Base type	Additional type	Base type	Additional type
	Model	GXV160UH2									
	Type	A1S	A1AS	A1S	A1T	A1S	A12	N1F	N1AH	N1	N12
Crankshaft	22.2mmØ Straight	●	●	●		●	●	●	●	●	●
	25.4mmØ Straight (Flat key-way)										
	25.4mmØ Straight										
	20mmØ Steped thread										
	5/8" Stepped thread										
	M8 Tapered										
	25mm Ø Straight				●						
Flywheel brake		●	●	●	●	●	●				

Block No.	Ref. No.	Part No.	Description	Reqd.QTY GXV 160 UH2	Base Part No.	Parts catalogue code
E-2	3	12200-ZE7-405	HEAD COMP., CYLINDER	1	12210-Z1V-000	
	8	90014-952-000	BOLT, FLANGE, 6X14(CT200)	3	90013-883-000	

E-7 CRANKSHAFT/PISTON

Ref. No.	LON	(Relative ref. Number) Description	FRT
5		(6,7,8,9,10,15)	
	1101F0	CRANKSHAFT	1.1

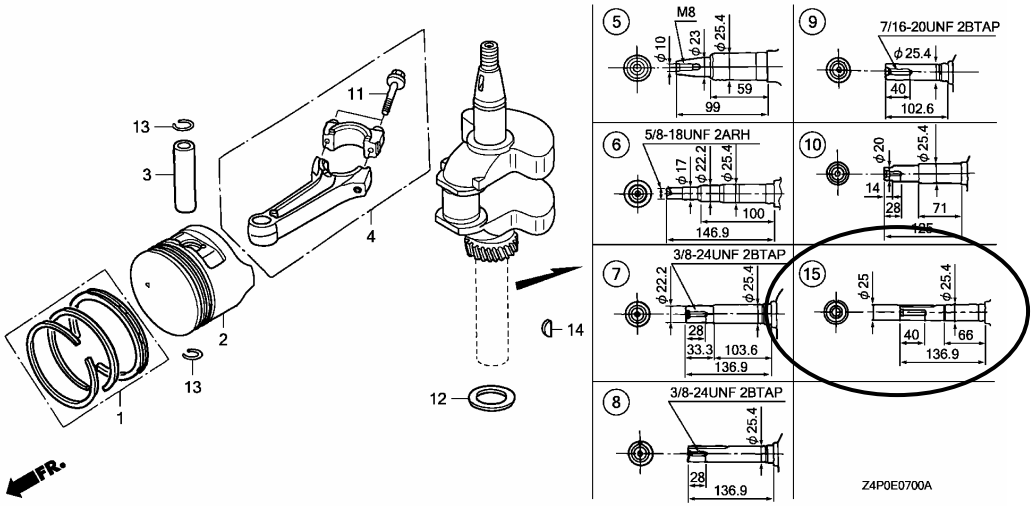

E-7	1	13010-Z4K-004	RING SET, PISTON (STD.) (TEIKOKU)	1	13010-ZL0-003	
		13010-Z4P-003	RING SET, PISTON (STD.)(RIKEN)	1	13010-ZL0-004	
		13011-Z4K-004	RING SET, PISTON (0.25) (TEIKOKU)	(1)	13011-ZL0-003	
		13011-Z4P-003	RING SET, PISTON (0.25)(RIKEN)	(1)	13011-ZL0-004	
		13012-Z4K-004	RING SET, PISTON (0.50) (TEIKOKU)	(1)	13012-ZL0-003	
		13012-Z4P-003	RING SET, PISTON (0.50)(RIKEN)	(1)	13012-ZL0-004	
		13013-Z4K-004	RING SET, PISTON (0.75) (TEIKOKU)	(1)	13013-ZL0-003	
		13013-Z4P-003	RING SET, PISTON (0.75)(RIKEN)	(1)	13013-ZL0-004	

Block No.	Ref. No.	Part No.	Description	Reqd.QTY GXV 160 UH2	Base Part No.	Parts catalogue code
	2	13101-Z1T-010	PISTON (STD.)(JIALING-HONDA) .	1	13101-Z1T-000	
		13102-ZH8-020	PISTON (0.25)	(1)	13102-ZE7-020	
		13103-ZH8-020	PISTON (0.50)	(1)	13103-ZE7-020	
		13104-ZH8-020	PISTON (0.75)	(1)	13104-ZE7-020	
	7		CRANKSHAFT COMP.	0	13310-ZE7-010	A1T
	15	13310-ZE7-V10	CRANKSHAFT COMP.	1		A1T

E-11 RECOIL STARTER

Ref. No.	LON	(Relative ref. Number) Description	FRT
1		(15)	
	1121B9	STARTER, RECOIL	0.1

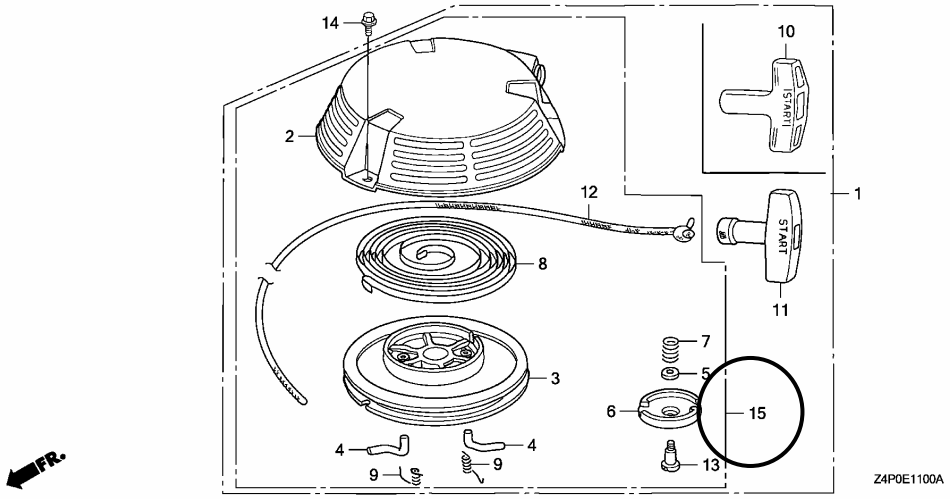

E-11	1		STARTER ASSY., RECOIL (LONG ROPE)		28400-Z1V-801ZA	
			NH1.....BLACK	0		A1T
			R280.....POWER RED	0	28400-Z1V-801ZB	A1T
		28400-Z1V-801ZB	*R280*.....POWER RED	1	28400-Z1V-003ZB	N12
	10	28461-ZE1-003	KNOB, RECOIL STARTER	1		N12
	11		GRIP, STARTER	0	28461-ZH8-003	N12

Block No.	Ref. No.	Part No.	Description	Reqd.QTY GXV 160 UH2	Base Part No.	Parts catalogue code
	12	28462-Z1V-801	ROPE, RECOIL STARTER (LONG) (2360MM)	1	28462-ZH8-003 N12	
	15	28400-Z1V-J52ZA	STARTER ASSY., RECOIL (LONG ROPE) *R280*.....POWER RED	1	A1T	
		28400-Z1V-J52ZB	*NH1*.....BLACK	1	A1T	
E-12	2	30500-Z1V-013	COIL ASSY., IGNITION	1	30500-Z1V-003	
E-14	9	16100-Z1V-801	CARBURETOR ASSY. (BE66N A) ...	1	16100-Z1V-003	

E-15 AIR CLEANER

Ref. No.	LON	(Relative ref. Number) Description	FRT
5		(12)	
	3121B1	COVER, AIR CLEANER ·····	0.1

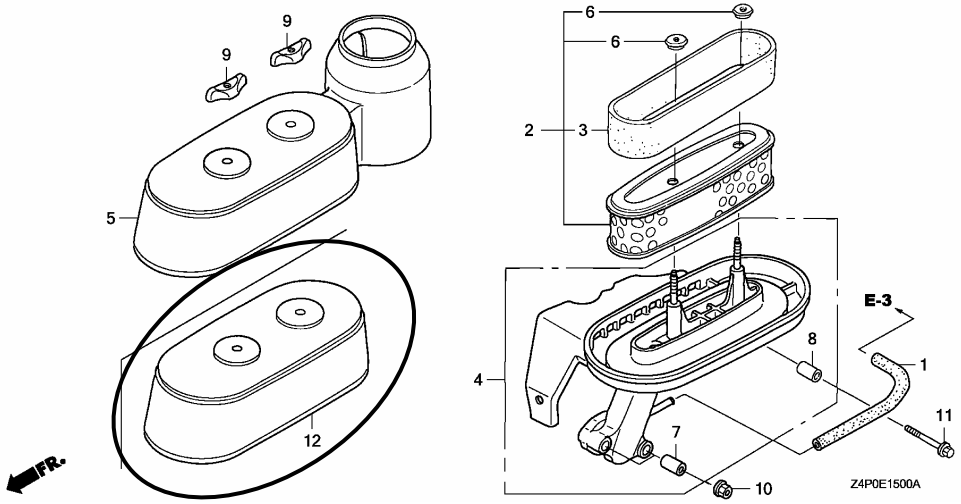

E-15	5		COVER, AIR CLEANER	0	17231-Z1V-000	
	12	17231-Z1V-G00	COVER, AIR CLEANER	1		

BOOKNo.:13Z4P601

Block No.	Ref. No.	Part No.	Description	Reqd.QTY GXV 160 UH2	Base Part No.	Parts catalogue code

E-17 FUEL TANK

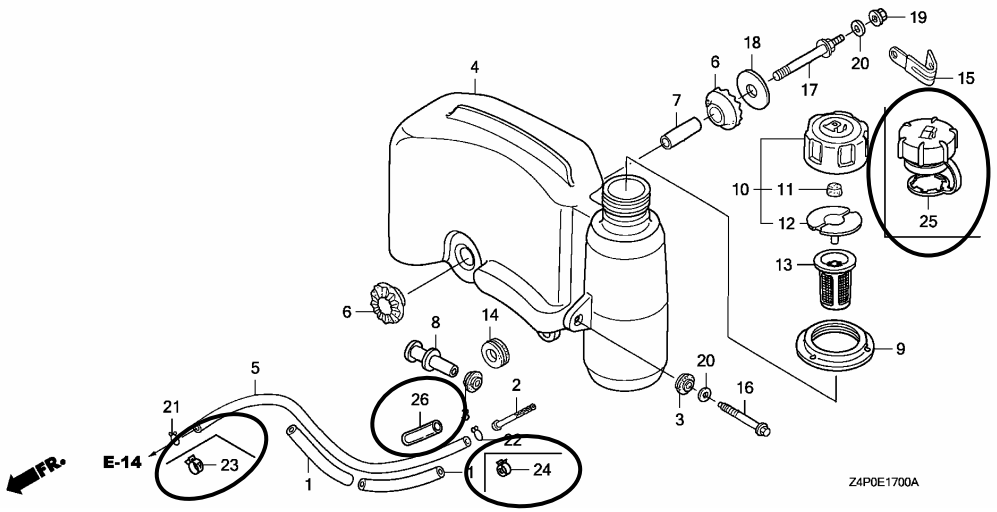

E-17	1	16854-ZH8-000	RUBBER, SUPPORTER (107MM)	1	16854-ZH8-000
	4	17510-Z4P-000	TANK COMP., FUEL	1	17510-Z1V-010
	5	17512-Z4P-013	TUBE, FUEL (FKM)	1	17512-ZE7-000
	9		RUBBER, TANK MOUNTING	0	17532-Z1V-000
	10		CAP ASSY., FUEL TANK	0	17620-Z1V-000
	11		SPONGE, FUEL CAP BREATHER	0	17622-888-010
	12		PACKING, FUEL CAP	0	17624-ZE7-000
	21		CLIP, TUBE (B8)	0	95002-02080
	22		CLIP, TUBE (C11)	0	95002-70000
	23	95002-40800-08	CLAMP, TUBE (D8)	1	
	24	95002-41050-08	CLAMP, TUBE (D10.5)	1	
	25	17620-Z0J-800	CAP ASSY., FUEL TANK	1	

BOOKNo.:13Z4P601

Block No.	Ref. No.	Part No.	Description	Reqd.QTY GXV 160 UH2	Base Part No.	Parts catalogue code
	26	95003-25003-20	TUBE, VINYL, 9X11X30 (95003-25001-10M)	1		
E-22	2	16551-ZE7-000	ARM, GOVERNOR	1		A1AS,A1T,A12,N1AH
	3	16555-ZE7-000	ROD, GOVERNOR	1		A1AS,A1T,A12,N1AH
	4	16561-ZE7-020	SPRING, GOVERNOR	1		A1AS,A1T,A12,N1AH
	5	16562-ZE6-000	SPRING, THROTTLE RETURN	1		A1AS,A1T,A12,N1AH
	7	16570-ZE7-020	CONTROL ASSY.	1		A1AS,A1T,A12,N1AH
	8	16573-ZE7-000	ROD, CHOKE	1		A1AS,A1T,A12,N1AH
	9	16576-ZE7-300	SPRING, LEVER	1		A1AS,A1T,A12,N1AH
	10	16576-891-000	HOLDER, CABLE	1		A1AS,A1T,A12,N1AH
	11	16584-883-300	SPRING, CONTROL ADJUSTING	2		A1AS,A1T,A12,N1AH
	12	16585-ZE7-000	PROTECTOR, CONTROL	1		A1AS,A1T,A12,N1AH
	14	36100-ZE7-013	SWITCH ASSY., ENGINE STOP	1		N1AH
	15	36101-ZE7-020	CORD, STOP SWITCH	1		N1AH
	16	36103-ZE1-000	HOLDER, STOP SWITCH CORD (NIFCO)	1		N1AH
	17	46392-SC2-003	CLAMP, BRAKE PIPE (GRAY)	1		N1AH
	18	90013-883-000	BOLT, FLANGE, 6X12(CT200)	2		A1AS,A1T,A12,N1AH
	19	90015-ZE5-010	BOLT, GOVERNOR ARM	1		A1AS,A1T,A12,N1AH
	21	90659-680-013	CLIP, WIRE HARNESS	1		A1AS,A1T,A12,N1AH
	22	93500-04008-0A	SCREW, PAN, 4X8	1		N1AH
	23	93500-05016-0A	SCREW, PAN, 5X16	1		A1AS,A1T,A12,N1AH
	24	93500-05020-0A	SCREW, PAN, 5X20	1		A1AS,A1T,A12,N1AH
	25	93500-05028-0A	SCREW, PAN, 5X28	1		A1AS,A1T,A12,N1AH
	26	94050-06000	NUT, FLANGE, 6MM	1		A1AS,A1T,A12,N1AH

BOOKNo.:13Z4P601

Block No.	Ref. No.	Part No.	Description	Reqd.QTY GXV 160 UH2	Base Part No.	Parts catalogue code
	27	95701-06010-00	BOLT, FLANGE, 6X10	2		A1AS,A1T,A12,N1AH
E-22-1	1		CONTROL ASSY. (EN)(STD.)	0	16500-ZE7-W11	N1AH
	2		ARM, GOVERNOR	0	16551-ZE7-000	A1AS,A1T,A12,N1AH
	3		ROD, GOVERNOR	0	16555-ZE7-000	A1AS,A1T,A12,N1AH
	4		SPRING, GOVERNOR	0	16561-ZE7-020	A1AS,A1T,A12,N1AH
	5		SPRING, THROTTLE RETURN	0	16562-ZE6-000	A1AS,A1T,A12,N1AH
	6		CONTROL COMP. (STD.)	0	16570-ZE7-W00	N1AH
			CONTROL COMP. (EN)(BRILL)	0	16570-ZE7-W20	A1AS,A1T,A12
	7		ROD, CHOKE	0	16573-ZE7-000	A1AS,A1T,A12,N1AH
	8		SPRING, LEVER	0	16576-ZE7-300	A1AS,A1T,A12,N1AH
	9		HOLDER, CABLE	0	16576-891-000	A1AS,A1T,A12,N1AH
	10		SPRING, CONTROL ADJUSTING	0	16584-883-300	A1AS,A1T,A12,N1AH
	11		PROTECTOR, CONTROL	0	16585-ZE7-000	A1AS,A1T,A12,N1AH
	12		COLLAR, STOPPER	0	16599-ZG1-M10	A1AS,A1T,A12,N1AH
	13		SWITCH ASSY., ENGINE STOP	0	36100-ZE7-013	N1AH
	14		CORD, STOP SWITCH	0	36101-ZE7-020	N1AH
	15		HOLDER, STOP SWITCH CORD (NIFCO)	0	36103-ZE1-000	N1AH
	16		CLAMP, BRAKE PIPE (GRAY)	0	46392-SC2-003	N1AH
	17		BOLT, FLANGE, 6X12(CT200)	0	90013-883-000	A1AS,A1T,A12,N1AH
	18		BOLT, GOVERNOR ARM	0	90015-ZE5-010	A1AS,A1T,A12,N1AH
	19		SCREW, RECESSED, 5X28	0	90016-ZE7-W00	A1AS,A1T,A12,N1AH
	20		CLIP, WIRE HARNESS	0	90659-680-013	A1AS,A1T,A12,N1AH
	21		SCREW, PAN, 4X8	0	93500-04008-0A	N1AH
	22		SCREW, PAN, 5X16	0	93500-05016-0A	A1AS,A1T,A12,N1AH

BOOKNo.:13Z4P601

Block No.	Ref. No.	Part No.	Description	Reqd.QTY GXV 160 UH2	Base Part No.	Parts catalogue code
	23		SCREW, PAN, 5X20	0	93500-05020-0A	A1AS,A1T,A12,N1AH
	24		NUT, FLANGE, 6MM	0	94050-06000	A1AS,A1T,A12,N1AH
	25		BOLT, FLANGE, 6X10	0	95701-06010-00	A1AS,A1T,A12,N1AH
E-28	6	99004-21003	WRENCH, BOX (P21)	1		A1AS,A1T,A12,N1AH

October 30, 2006

HONDA POWER PRODUCTS

PARTS CATALOGUE NEWS

Honda Motor Co., Ltd. Service Division

CODE NO.	BOOKLET TYPE	13Z4P601
	MICRO-FICHE	13Z4P6EA/FA
PARTS CATALOGUE NEWS	GXV160UH2	
NEWS NO.	005	

PARTS CATALOGUE - CORRECTED

Printed in Japan

Block No.	Ref. No.	Note	Part No.	Description	Reqd.QTY GXV 160 UH2	Serial No.	Parts catalogue code
E-2	3	E	12210-Z1V-000	*PARTS NO. DELETION			
		T	12200-ZE7-405	HEAD COMP., CYLINDER	1		

NOTE A:PART NO.CHANGE D:NEWLY PROVIDED E:PART NO.DELETION K:REQUIRED NO.CORRECTION L:APPLICATION SERIAL NO.CORRECTION
T:APPLICATION CORRECTION Z:REMARKS CHANGE

January 28, 2007

HONDA POWER PRODUCTS

PARTS CATALOGUE NEWS

Honda Motor Co., Ltd. Service Division

CODE NO.	BOOKLET TYPE	13Z4P601
	MICRO-FICHE	13Z4P6EA/FA
PARTS CATALOGUE NEWS	GXV160UH2	
NEWS NO.	006	

PARTS CATALOGUE - CORRECTED

Printed in Japan

Block No.	Ref. No.	Note	Part No.	Description	Reqd.QTY GXV 160 UH2	Serial No.		Parts catalogue code
E-3	4	E	12000-Z1V-000	*PARTS NO. DELETION				
		E	12000-Z2J-000	*PARTS NO. DELETION				
		D	12000-Z1V-405	BARREL ASSY., CYLINDER	1	-------	-------	A1AS, A1S, A1SA, A1T, A12, A14
		D	12000-Z2J-405	.....	1	-------	-------	N1, N1AH, N1F, N12, N15, N4, N45, N5M, N55, SFL, SFL1, SFY, SFY1, T1AH

NOTE A:PART NO.CHANGE D:NEWLY PROVIDED E:PART NO.DELETION K:REQUIRED NO.CORRECTION L:APPLICATION SERIAL NO.CORRECTION
T:APPLICATION CORRECTION Z:REMARKS CHANGE

March 12, 2007

HONDA POWER PRODUCTS

PARTS CATALOGUE NEWS

Honda Motor Co., Ltd. Service Division

CODE NO.	BOOKLET TYPE	13Z4P601
	MICRO-FICHE	13Z4P6EA/FA
PARTS CATALOGUE NEWS	GXV160UH2	
NEWS NO.	007	

PARTS CATALOGUE - CORRECTED

Printed in Japan

Block No.	Ref. No.	Note	Part No.	Description	Reqd. QTY GXV 160 UH2	Serial No.	Parts catalogue code
E-3			CYLINDER BARREL				

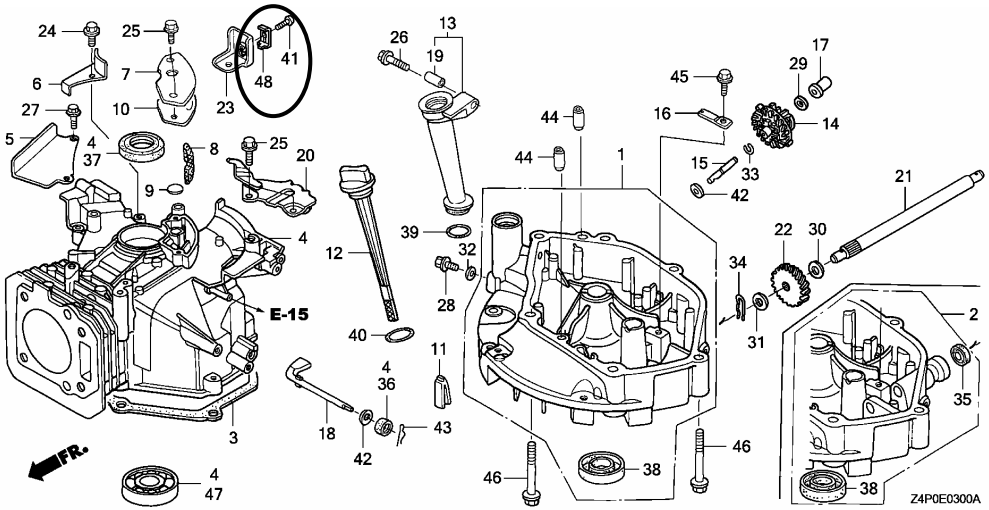

E-3	48	D	16576-891-000	HOLDER, CABLE	1	-------	-------	A1AS, A1S, A1SA, A1T, A12, A14

NOTE A:PART NO.CHANGE D:NEWLY PROVIDED E:PART NO.DELETION K:REQUIRED NO.CORRECTION L:APPLICATION SERIAL NO.CORRECTION
T:APPLICATION CORRECTION Z:REMARKS CHANGE

March 25, 2007

HONDA POWER PRODUCTS

PARTS CATALOGUE NEWS

Honda Motor Co., Ltd. Service Division

CODE NO.	BOOKLET TYPE	13Z4P601
	MICRO-FICHE	13Z4P6EA/FA
PARTS CATALOGUE NEWS	GXV160UH2	
NEWS NO.	008	

PARTS CATALOGUE - CORRECTED

Printed in Japan

Block No.	Ref. No.	Note	Part No.	Description	Reqd. QTY GXV 160 UH2	Serial No.	Parts catalogue code
E-11			RECOIL STARTER				

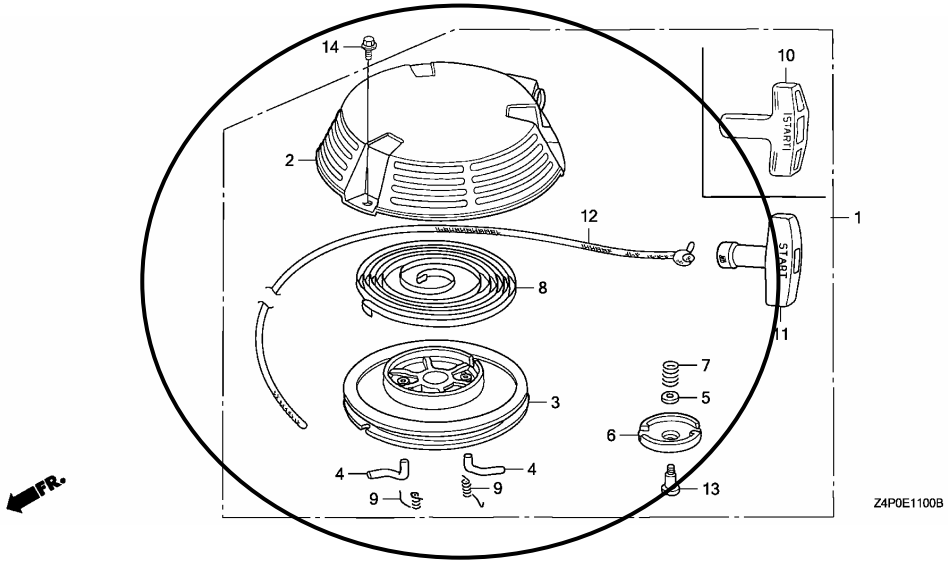

NOTE A:PART NO.CHANGE D:NEWLY PROVIDED E:PART NO.DELETION K:REQUIRED NO.CORRECTION L:APPLICATION SERIAL NO.CORRECTION
T:APPLICATION CORRECTION Z:REMARKS CHANGE

BOOKNo.:13Z4P601

Block No.	Ref. No.	Note	Part No.	Description	Reqd.QTY GXV 160 UH2	Serial No.		Parts catalogue code
E-11	1	D	28400-Z4P-801ZA	STARTER ASSY., RECOIL (LONG ROPE) *NH1*.....BLACK	1	-------	-------	A1T
		D	28400-Z4P-801ZB	*R280*.....POWER RED	1	-------	-------	A1T
	12	T	28462-Z1V-801	ROPE, RECOIL STARTER (LONG) (2360MM)	1	-------	-------	A1AS,A1S,A1SA,A12,A14,N1AH,N1F,N12,N15,N45,N5M,N55
		D	28462-Z4P-801	ROPE, RECOIL STARTER	1	-------	-------	A1T
	15	E	28400-Z1V-J52ZA	*PARTS NO. DELETION				
		E	28400-Z1V-J52ZB	*PARTS NO. DELETION				

NOTE A:PART NO.CHANGE D:NEWLY PROVIDED E:PART NO.DELETION K:REQUIRED NO.CORRECTION L:APPLICATION SERIAL NO.CORRECTION
T:APPLICATION CORRECTION Z:REMARKS CHANGE

April 02, 2007

HONDA POWER PRODUCTS

PARTS CATALOGUE NEWS

Honda Motor Co., Ltd. Service Division

CODE NO.	BOOKLET TYPE	13Z4P601
	MICRO-FICHE	13Z4P6EA/FA
PARTS CATALOGUE NEWS	GXV160UH2	
NEWS NO.	009	

PARTS CATALOGUE - CORRECTED

Printed in Japan

Block No.	Ref. No.	Note	Part No.	Description	Reqd. QTY GXV 160 UH2	Serial No.		Parts catalogue code
E-14	8	E	16044-ZE0-005	*PARTS NO. DELETION				
		D	16045-Z1V-G01	CHOKE SET	1	-------	-------	A1AS, A1T, A12, N1AH, N12
				(CARBURETOR NO.)	1	BE66N A	-------	A1S, A1SA, A14, N1, N1F, N15, N4, N45, N5M, N55, SFL, SFL1, SFY, SFY1 T1AH

NOTE A:PART NO.CHANGE D:NEWLY PROVIDED E:PART NO.DELETION K:REQUIRED NO.CORRECTION L:APPLICATION SERIAL NO.CORRECTION
T:APPLICATION CORRECTION Z:REMARKS CHANGE

April 22,2007

HONDA POWER PRODUCTS

PARTS CATALOGUE NEWS

Honda Motor Co., Ltd. Service Division

CODE NO.	BOOKLET TYPE	13Z4P601
	MICRO-FICHE	13Z4P6EA/FA
PARTS CATALOGUE NEWS	GXV160UH2	
NEWS NO.	010	

PARTS CATALOGUE - CORRECTED

Printed in Japan

Block No.	Ref. No.	Note	Part No.	Description	Reqd.QTY GXV 160 UH2	Serial No.		Parts catalogue code
E-3	21		23411-ZE7-000	SHAFT, DRIVE	1	-------	1026784	SFL,SFL1,SFY1
		A	23411-ZE7-010	.....	1	1026785	-------	SFL,SFL1,SFY1
E-7	1	L	13010-ZL0-003	RING SET, PISTON (STD.) (TEIKOKU)	1	-------	1036455	A1S,A1SA,A14,N1,N1F,N15,N4,N45,N5M,N55,SFL,SFL1,SFY,SFY1 T1AH
		L	13010-ZL0-004	RING SET, PISTON (STD.) (NIPPON)	1	-------	1036455	A1S,A1SA,A14,N1,N1F,N15,N4,N45,N5M,N55,SFL,SFL1,SFY,SFY1 T1AH
		L	13011-ZL0-003	RING SET, PISTON (0.25) (TEIKOKU)	(1)	-------	1036455	A1S,A1SA,A14,N1,N1F,N15,N4,N45,N5M,N55,SFL,SFL1,SFY,SFY1 T1AH
		L	13011-ZL0-004	RING SET, PISTON (0.25) (NIPPON)	(1)	-------	1036455	A1S,A1SA,A14,N1,N1F,N15,N4,N45,N5M,N55,SFL,SFL1,SFY,SFY1 T1AH
		L	13012-ZL0-003	RING SET, PISTON (0.50) (TEIKOKU)	(1)	-------	1036455	A1S,A1SA,A14,N1,N1F,N15,N4,N45,N5M,N55,SFL,SFL1,SFY,SFY1 T1AH

NOTE A:PART NO.CHANGE D:NEWLY PROVIDED E:PART NO.DELETION K:REQUIRED NO.CORRECTION L:APPLICATION SERIAL NO.CORRECTION
T:APPLICATION CORRECTION Z:REMARKS CHANGE

BOOKNo.:13Z4P601

Block No.	Ref. No.	Note	Part No.	Description	Reqd.QTY GXV 160 UH2	Serial No.		Parts catalogue code
		L	13012-ZL0-004	RING SET, PISTON (0.50) (NIPPON)	(1)	-------	1036455	A1S,A1SA,A14,N1,N1F,N15,N4,N45,N5M,N55,SFL,SFL1,SFY,SFY1 T1AH
		L	13013-ZL0-003	RING SET, PISTON (0.75) (TEIKOKU)	(1)	-------	1036455	A1S,A1SA,A14,N1,N1F,N15,N4,N45,N5M,N55,SFL,SFL1,SFY,SFY1 T1AH
		L	13013-ZL0-004	RING SET, PISTON (0.75) (NIPPON)	(1)	-------	1036455	A1S,A1SA,A14,N1,N1F,N15,N4,N45,N5M,N55,SFL,SFL1,SFY,SFY1 T1AH
		T	13010-Z4K-004	RING SET, PISTON (STD.) (TEIKOKU)	1	-------	-------	A1AS,A1T,A12,N1AH,N12
					1	1036456	-------	A1S,A1SA,A14,N1,N1F,N15,N4,N45,N5M,N55,SFL,SFL1,SFY,SFY1 T1AH
		T	13010-Z4P-003	RING SET, PISTON (STD.)(RIKEN)	1	-------	-------	A1AS,A1T,A12,N1AH,N12
					1	1036456	-------	A1S,A1SA,A14,N1,N1F,N15,N4,N45,N5M,N55,SFL,SFL1,SFY,SFY1 T1AH
		T	13011-Z4K-004	RING SET, PISTON (0.25) (TEIKOKU)	(1)	-------	-------	A1AS,A1T,A12,N1AH,N12
					(1)	1036456	-------	A1S,A1SA,A14,N1,N1F,N15,N4,N45,N5M,N55,SFL,SFL1,SFY,SFY1 T1AH
		T	13011-Z4P-003	RING SET, PISTON (0.25)(RIKEN)	(1)	-------	-------	A1AS,A1T,A12,N1AH,N12
					(1)	1036456	-------	A1S,A1SA,A14,N1,N1F,N15,N4,N45,N5M,N55,SFL,SFL1,SFY,SFY1 T1AH
		T	13012-Z4K-004	RING SET, PISTON (0.50) (TEIKOKU)	(1)	-------	-------	A1AS,A1T,A12,N1AH,N12
					(1)	1036456	-------	A1S,A1SA,A14,N1,N1F,N15,N4,N45,N5M,N55,SFL,SFL1,SFY,SFY1 T1AH
		T	13012-Z4P-003	RING SET, PISTON (0.50)(RIKEN)	(1)	-------	-------	A1AS,A1T,A12,N1AH,N12
					(1)	1036456	-------	A1S,A1SA,A14,N1,N1F,N15,N4,N45,N5M,N55,SFL,SFL1,SFY,SFY1 T1AH
		T	13013-Z4K-004	RING SET, PISTON (0.75) (TEIKOKU)	(1)	-------	-------	A1AS,A1T,A12,N1AH,N12

NOTE A:PART NO.CHANGE D:NEWLY PROVIDED E:PART NO.DELETION K:REQUIRED NO.CORRECTION L:APPLICATION SERIAL NO.CORRECTION
T:APPLICATION CORRECTION Z:REMARKS CHANGE

BOOKNo.:13Z4P601

Block No.	Ref. No.	Note	Part No.	Description	Reqd.QTY GXV 160 UH2	Serial No.		Parts catalogue code
					(1)	1036456	-------	A1S,A1SA,A14,N1,N1F,N15,N4,N45,N5M,N55,SFL,SFL1,SFY,SFY1 T1AH
		T	13013-Z4P-003	RING SET, PISTON (0.75)(RIKEN)	(1)	-------	-------	A1AS,A1T,A12,N1AH,N12
					(1)	1036456	-------	A1S,A1SA,A14,N1,N1F,N15,N4,N45,N5M,N55,SFL,SFL1,SFY,SFY1 T1AH
	2	L	13101-Z1T-000	PISTON (STD.)(JIALING-HONDA) .	1	-------	1036455	A1S,A1SA,A14,N1,N1F,N15,N4,N45,N5M,N55,SFL,SFL1,SFY,SFY1 T1AH
		L	13102-ZE7-020	PISTON (0.25)	(1)	-------	1036455	A1S,A1SA,A14,N1,N1F,N15,N4,N45,N5M,N55,SFL,SFL1,SFY,SFY1 T1AH
		L	13103-ZE7-020	PISTON (0.50)	(1)	-------	1036455	A1S,A1SA,A14,N1,N1F,N15,N4,N45,N5M,N55,SFL,SFL1,SFY,SFY1 T1AH
		L	13104-ZE7-020	PISTON (0.75)	(1)	-------	1036455	A1S,A1SA,A14,N1,N1F,N15,N4,N45,N5M,N55,SFL,SFL1,SFY,SFY1 T1AH
		T	13101-Z1T-010	PISTON (STD.)(JIALING-HONDA) .	1	-------	-------	A1AS,A1T,A12,N1AH,N12
					1	1036456	-------	A1S,A1SA,A14,N1,N1F,N15,N4,N45,N5M,N55,SFL,SFL1,SFY,SFY1 T1AH
		T	13102-ZH8-020	PISTON (0.25)	(1)	-------	-------	A1AS,A1T,A12,N1AH,N12
					(1)	1036456	-------	A1S,A1SA,A14,N1,N1F,N15,N4,N45,N5M,N55,SFL,SFL1,SFY,SFY1 T1AH
		T	13103-ZH8-020	PISTON (0.50)	(1)	-------	-------	A1AS,A1T,A12,N1AH,N12
					(1)	1036456	-------	A1S,A1SA,A14,N1,N1F,N15,N4,N45,N5M,N55,SFL,SFL1,SFY,SFY1 T1AH
		T	13104-ZH8-020	PISTON (0.75)	(1)	-------	-------	A1AS,A1T,A12,N1AH,N12
					(1)	1036456	-------	A1S,A1SA,A14,N1,N1F,N15,N4,N45,N5M,N55,SFL,SFL1,SFY,SFY1 T1AH
E-15	5	L	17231-Z1V-000	COVER, AIR CLEANER	1	-------	1036455	A1S,A1SA,A14,N1,N1F,N15,N4,N45,N5M,N55,SFL,SFL1,SFY,SFY1 T1AH
	12		17231-Z1V-G00	COVER, AIR CLEANER	1	-------	1036455	A1AS,A1T,A12,N1AH,N12
		A	17231-Z1V-G01	.....	1	1036456		

NOTE A:PART NO.CHANGE D:NEWLY PROVIDED E:PART NO.DELETION K:REQUIRED NO.CORRECTION L:APPLICATION SERIAL NO.CORRECTION
T:APPLICATION CORRECTION Z:REMARKS CHANGE

BOOKNo.:13Z4P601

Block No.	Ref. No.	Note	Part No.	Description	Reqd.QTY GXV 160 UH2	Serial No.		Parts catalogue code
E-17	4	L	17510-Z1V-010	TANK COMP., FUEL	1	-------	1036455	A1S,A1SA,A14,N1,N1F,N15,N4,N45,N5M,N55,SFL,SFL1,SFY,SFY1 T1AH
		T	17510-Z4P-000	.....	1	-------	-------	A1AS,A1T,A12,N1AH,N12
					1	1036456	-------	A1S,A1SA,A14,N1,N1F,N15,N4,N45,N5M,N55,SFL,SFL1,SFY,SFY1 T1AH
	5		17512-ZE7-000	TUBE, FUEL	1	-------	1011283	A1S,A1SA,A14,N1,N1F,N15,N4,N45,N5M,N55,SFL,SFL1,SFY,SFY1 T1AH
		A	17512-Z4P-003	TUBE, FUEL (FKM)	1	1011284	-------	A1S,A1SA,A14,N1,N1F,N15,N4,N45,N5M,N55,SFL,SFL1,SFY,SFY1 T1AH
	9	L	17532-Z1V-000	RUBBER, TANK MOUNTING	1	-------	1036455	A1S,A1SA,A14,N1,N1F,N15,N4,N45,N5M,N55,SFL,SFL1,SFY,SFY1 T1AH
	10	L	17620-Z1V-000	CAP ASSY., FUEL TANK	1	-------	1036455	A1S,A1SA,A14,N1,N1F,N15,N4,N45,N5M,N55,SFL,SFL1,SFY,SFY1 T1AH
	11	L	17622-888-010	SPONGE, FUEL CAP BREATHER	1	-------	1036455	A1S,A1SA,A14,N1,N1F,N15,N4,N45,N5M,N55,SFL,SFL1,SFY,SFY1 T1AH
	12	L	17624-ZE7-000	PACKING, FUEL CAP	1	-------	1036455	A1S,A1SA,A14,N1,N1F,N15,N4,N45,N5M,N55,SFL,SFL1,SFY,SFY1 T1AH
	21	L	95002-02080	CLIP, TUBE (B8)	1	-------	1011283	A1S,A1SA,A14,N1,N1F,N15,N4,N45,N5M,N55,SFL,SFL1,SFY,SFY1 T1AH
	22	L	95002-70000	CLIP, TUBE (C11)	1	-------	1011283	A1S,A1SA,A14,N1,N1F,N15,N4,N45,N5M,N55,SFL,SFL1,SFY,SFY1 T1AH
	23	T	95002-40800-08	CLAMP, TUBE (D8)	1	-------	-------	A1AS,A1T,A12,N1AH,N12
					1	1011284	-------	A1S,A1SA,A14,N1,N1F,N15,N4,N45,N5M,N55,SFL,SFL1,SFY,SFY1 T1AH
	24	T	95002-41050-08	CLAMP, TUBE (D10.5)	1	-------	-------	A1AS,A1T,A12,N1AH,N12
					1	1011284	-------	A1S,A1SA,A14,N1,N1F,N15,N4,N45,N5M,N55,SFL,SFL1,SFY,SFY1 T1AH
	25	T	17620-Z0J-800	CAP ASSY., FUEL TANK	1	-------	-------	A1AS,A1T,A12,N1AH,N12
					1	1036456	-------	A1S,A1SA,A14,N1,N1F,N15,N4,N45,N5M,N55,SFL,SFL1,SFY,SFY1 T1AH
E-19	4	T	31110-Z1V-003	FLYWHEEL COMP.	1	-------	-------	N1AH,N1F,N5M,SFL,SFL1,SFY,SFY1

NOTE A:PART NO.CHANGE D:NEWLY PROVIDED E:PART NO.DELETION K:REQUIRED NO.CORRECTION L:APPLICATION SERIAL NO.CORRECTION
T:APPLICATION CORRECTION Z:REMARKS CHANGE

Block No.	Ref. No.	Note	Part No.	Description	Reqd.QTY GXV 160 UH2	Serial No.		Parts catalogue code
					1	1036456	-------	T1AH
	5	L	31110-Z1V-810	FLYWHEEL COMP. (BRAKE)	1	-------	-------	N1,N12,N15,N4,N45,N55
					1	-------	1036455	T1AH

E-28 LABEL/TOOL

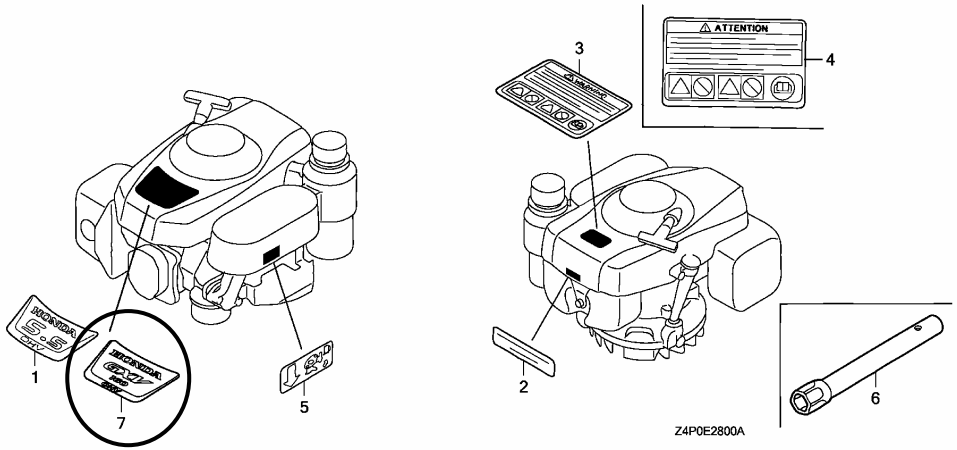

E-28	1	L	87101-Z1V-000	MARK, EMBLEM (GXV160 5.5)	1	-------	1036455	
	7	D	87101-Z1V-010	MARK, EMBLEM (GXV160)	1	1036456		

NOTE A:PART NO.CHANGE D:NEWLY PROVIDED E:PART NO.DELETION K:REQUIRED NO.CORRECTION L:APPLICATION SERIAL NO.CORRECTION
T:APPLICATION CORRECTION Z:REMARKS CHANGE

April 29,2007

HONDA POWER PRODUCTS

PARTS CATALOGUE NEWS

Honda Motor Co., Ltd. Service Division

CODE NO.	BOOKLET TYPE	13Z4P601
	MICRO-FICHE	13Z4P6EA/FA
PARTS CATALOGUE NEWS	GXV160UH2	
NEWS NO.	011	

PARTS CATALOGUE - CORRECTED

Printed in Japan

Block No.	Ref. No.	Note	Part No.	Description	Reqd.QTY GXV 160 UH2	Serial No.		Parts catalogue code
E-2	8	L	90013-883-000	BOLT, FLANGE, 6X12(CT200)	3	-------	1020657	A1S,A1SA,A14,N1,N1F,N15,N4,N45,N5M,N55,SFL,SFL1,SFY,SFY1 T1AH
		T	90014-952-000	BOLT, FLANGE, 6X14(CT200)	3	-------	-------	A1AS,A1T,A12,N1AH,N12
					3	1020658	-------	A1S,A1SA,A14,N1,N1F,N15,N4,N45,N5M,N55,SFL,SFL1,SFY,SFY1 T1AH
E-19	2	T	19511-Z1T-000	FAN, COOLING	1	-------	-------	N1AH,N1F,N5M,SFL,SFL1,SFY,SFY1
					1	1036456	-------	T1AH
E-40	1	L	19512-883-000	COLLAR, FAN	2	-------	1101679	SFL1,SFY1
	2	L	72600-VA4-010	HOLDER ASSY., BLADE	1	-------	1101679	SFL1,SFY1
	3	L	72610-VA4-000	HOLDER COMP., BLADE	1	-------	1101679	SFL1,SFY1
	4	L	72613-VA4-000	BUSH, BLADE HOLDER	2	-------	1101679	SFL1,SFY1
	5	L	75090-VA4-030	PLATE ASSY., BALL CONTROL	1	-------	1101679	SFL1,SFY1
	6	L	75100-VA4-010	BRAKE COMP.	1	-------	1101679	SFL1,SFY1
	7	L	75110-VA4-000	RETAINER COMP., BALL	1	-------	1101679	SFL1,SFY1

NOTE A:PART NO.CHANGE D:NEWLY PROVIDED E:PART NO.DELETION K:REQUIRED NO.CORRECTION L:APPLICATION SERIAL NO.CORRECTION
T:APPLICATION CORRECTION Z:REMARKS CHANGE

BOOKNo.:13Z4P601

Block No.	Ref. No.	Note	Part No.	Description	Reqd.QTY GXV 160 UH2	Serial No.		Parts catalogue code
	8	L	75120-VA4-010	DISK, BRAKE	1	-------	1101679	SFL1,SFY1
	9	L	75130-VA4-000	DISK, DRIVE	1	-------	1101679	SFL1,SFY1
	10	L	75132-VA4-000	SPRING, BRAKE HOLDER	3	-------	1101679	SFL1,SFY1
	11	L	75133-VA4-000	BUSH, BRAKE HOLDER	3	-------	1101679	SFL1,SFY1
	12	L	75140-VA4-020	PLATE COMP., BALL CONTROL	1	-------	1101679	SFL1,SFY1
	13	L	75150-VA3-J01	DISK COMP., DRIVEN	1	-------	1101679	SFL1,SFY1
	14	L	75182-VA3-J00	SPRING, CLUTCH RETURN (53.0MM)	2	-------	1101679	SFL1,SFY1
	15	L	75183-VA3-J00	SPRING, CLUTCH (36.6MM)	1	-------	1101679	SFL1,SFY1
	16	L	90014-952-000	BOLT, FLANGE, 6X14(CT200)	4	-------	1101679	SFL1,SFY1
	17	L	90021-VA4-000	BOLT, SPECIAL, 6MM	3	-------	1101679	SFL1,SFY1
	18	L	90105-960-003	BOLT, HEX., 10X25	1	-------	1101679	SFL1,SFY1
	19	L	90409-952-000	WASHER, 10MM	1	-------	1101679	SFL1,SFY1
	20	L	90501-952-010	WASHER, THRUST	1	-------	1101679	SFL1,SFY1
	21	L	91102-VA4-013	BEARING, RADIAL BALL, 6204 ...	1	-------	1101679	SFL1,SFY1
	22	L	91103-VA4-003	BEARING, RADIAL BALL, 60/22 ..	1	-------	1101679	SFL1,SFY1
	23	L	94401-16150	KEY, WOODRUFF, 16X15	1	-------	1101679	SFL1,SFY1

NOTE A:PART NO.CHANGE D:NEWLY PROVIDED E:PART NO.DELETION K:REQUIRED NO.CORRECTION L:APPLICATION SERIAL NO.CORRECTION
T:APPLICATION CORRECTION Z:REMARKS CHANGE

June 11, 2007

HONDA POWER PRODUCTS

PARTS CATALOGUE NEWS

Honda Motor Co., Ltd. Service Division

CODE NO.	BOOKLET TYPE	13Z4P601
	MICRO-FICHE	13Z4P6EA/FA
PARTS CATALOGUE NEWS	GXV160UH2	
NEWS NO.	012	

PARTS CATALOGUE - CORRECTED

Printed in Japan

Block No.	Ref. No.	Note	Part No.	Description	Reqd. QTY GXV 160 UH2	Serial No.	Parts catalogue code

E-3 CYLINDER BARREL

Ref. No.	LON	(Relative ref. Number) Description	FRT
1		(2,50)	
	1131C1	PAN, OIL	0.3

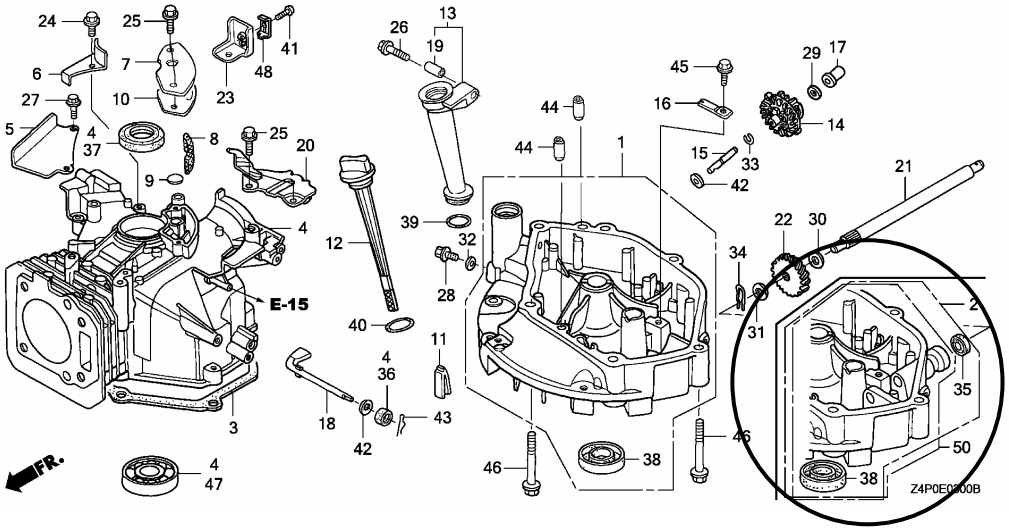

E-3	1	E	11300-Z1V-409	*PARTS NO. DELETION

NOTE A:PART NO.CHANGE D:NEWLY PROVIDED E:PART NO.DELETION K:REQUIRED NO.CORRECTION L:APPLICATION SERIAL NO.CORRECTION
T:APPLICATION CORRECTION Z:REMARKS CHANGE

Block No.	Ref. No.	Note	Part No.	Description	Reqd.QTY GXV 160 UH2	Serial No.		Parts catalogue code
	50	D	11300-Z1V-409	PAN ASSY., OIL	1	-------	-------	SFY

E-14 CARBURETOR

ILLUSTRATION CORRECTED

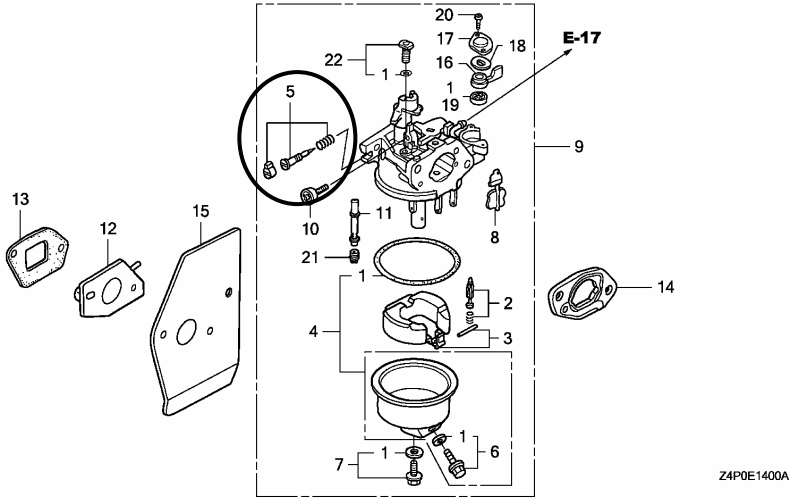

E-14	9	L	16100-Z1V-J71	CARBURETOR ASSY. (BE66M A) ...	1	-------	1001679	N5M
		L	16100-Z1V-003	CARBURETOR ASSY. (BE66J A) ...	1	-------	1001679	A1S, A1SA, A14, N1, N1F, N15, N4, N45, N55, SFL, SFL1, SFY, SFY1, T1AH
		T	16100-Z1V-801	CARBURETOR ASSY. (BE66N A) ...	1	-------	-------	A1AS, A1T, A12, N1AH, N12
					1	1001680	-------	A1S, A1SA, A14, N1, N1F, N15, N4, N45, N5M, N55, SFL, SFL1, SFY, SFY1 T1AH

NOTE A:PART NO.CHANGE D:NEWLY PROVIDED E:PART NO.DELETION K:REQUIRED NO.CORRECTION L:APPLICATION SERIAL NO.CORRECTION
T:APPLICATION CORRECTION Z:REMARKS CHANGE

BOOKNo.:13Z4P601

Block No.	Ref. No.	Note	Part No.	Description	Reqd.QTY GXV 160 UH2	Serial No.	Parts catalogue code

E-22 CONTROL (1)

ILLUSTRATION CORRECTED

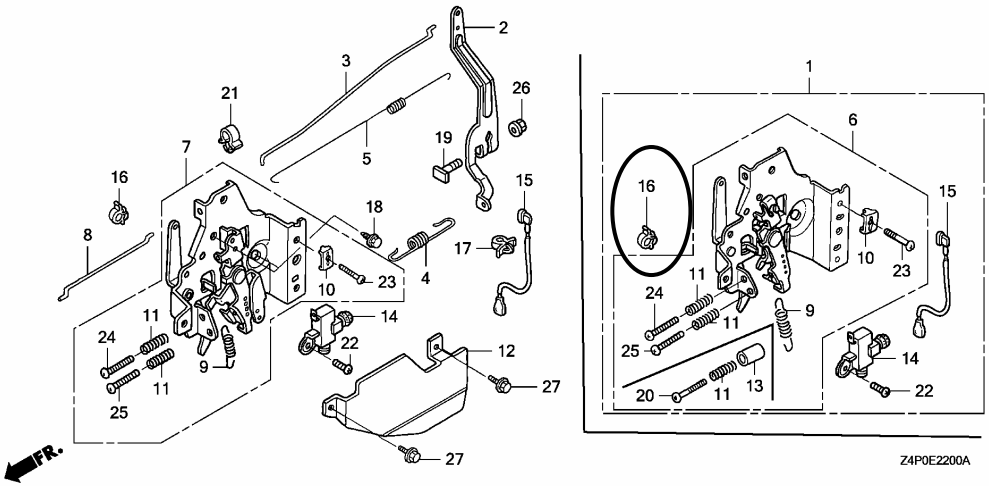

NOTE A:PART NO.CHANGE D:NEWLY PROVIDED E:PART NO.DELETION K:REQUIRED NO.CORRECTION L:APPLICATION SERIAL NO.CORRECTION
T:APPLICATION CORRECTION Z:REMARKS CHANGE

June 17, 2007

HONDA POWER PRODUCTS

PARTS CATALOGUE NEWS

Honda Motor Co., Ltd. Service Division

CODE NO.	BOOKLET TYPE	13Z4P601
	MICRO-FICHE	13Z4P6EA/FA
PARTS CATALOGUE NEWS	GXV160UH2	
NEWS NO.	013	

PARTS CATALOGUE - CORRECTED

Printed in Japan

Block No.	Ref. No.	Note	Part No.	Description	Reqd.QTY GXV 160 UH2	Serial No.	Parts catalogue code
E-28	7		87101-Z1V-010	MARK, EMBLEM (GXV160)	1	1036456 1046647	
		A	87101-Z1V-020	.....	1	1046648	

NOTE A:PART NO.CHANGE D:NEWLY PROVIDED E:PART NO.DELETION K:REQUIRED NO.CORRECTION L:APPLICATION SERIAL NO.CORRECTION
T:APPLICATION CORRECTION Z:REMARKS CHANGE

July 14, 2007

HONDA POWER PRODUCTS

PARTS CATALOGUE NEWS

Honda Motor Co., Ltd. Service Division

PARTS CATALOGUE - CORRECTED

Printed in Japan

CODE NO.	BOOKLET TYPE	13Z4P601
	MICRO-FICHE	13Z4P6EA/FA
PARTS CATALOGUE NEWS	GXV160UH2	
NEWS NO.	014	

GXV160UH2-N1F1 TYPE sales information

NOTE: This Parts Catalogue News explains only the parts of the different model that are produced to conform to addition of the GXV160UH2-N1F1 type.
As for the parts not listed on this Parts Catalogue News, use the parts of the GXV160UH2-N1F type.

・Models,parts catalogue codes and applicable serial numbers

Model	Type		Parts catalogue type	Applicable engine serial No.	Applicable carburetor identification No.
GXV160UH2	N1F	Base type	N1F	GJABH-1000001~	BE66J A / BE66N A
	N1F1	Additional type	N1F1		BE66R A

・Features of each type

Specifications	Type	Base type	Additional type
	Model	GXV160UH2	
	Type	N1F	N1F1
Crankshaft	22.2 mm ø Straight	●	●
	25 mm ø Straight		
	25.4 mm ø Straight (Flat key-way)		
	25.4 mm ø Straight		
	20 mm ø Stepped thread		
	5/8'' Stepped thread		
	M8 Tapered		
Flywheel brake			

BOOKNo.:13Z4P601

Block No.	Ref. No.	Part No.	Description	Reqd.QTY GXV 160 UH2	Base Part No.	Parts catalogue code
E-11	1		STARTER ASSY., RECOIL (LONG ROPE) *R280*.....POWER RED	0	28400-Z1V-801ZB	
	2		CASE COMP., RECOIL STARTER *R280*.....POWER RED	0	28410-Z1V-003ZA	
E-12	1		COVER COMP., FAN *R280*.....POWER RED	0	19610-Z1V-000ZA	
	2	30500-Z1V-013	COIL ASSY., IGNITION	1	30500-Z1V-003	
E-14	9	16100-Z1V-811	CARBURETOR ASSY. (BE66R A) ...	1	16100-Z1V-801	
E-17	1	16854-ZH8-000	RUBBER, SUPPORTER (107MM)	1	16854-ZH8-000	
	5	17512-Z4P-013	TUBE, FUEL (FKM)	1	17512-Z4P-003	
	26	95003-25003-20	TUBE, VINYL, 9X11X30 (95003-25001-10M)	1		

July 29, 2007

HONDA POWER PRODUCTS

PARTS CATALOGUE NEWS

Honda Motor Co., Ltd. Service Division

CODE NO.	BOOKLET TYPE	13Z4P601
	MICRO-FICHE	13Z4P6EA/FA
PARTS CATALOGUE NEWS	GXV160UH2	
NEWS NO.	015	

PARTS CATALOGUE - CORRECTED

Printed in Japan

Block No.	Ref. No.	Note	Part No.	Description	Reqd.QTY GXV 160 UH2	Serial No.	Parts catalogue code
E-12	2	E	30500-Z1V-003	*PARTS NO. DELETION			
		T	30500-Z1V-013	COIL ASSY., IGNITION	1		

NOTE A:PART NO.CHANGE D:NEWLY PROVIDED E:PART NO.DELETION K:REQUIRED NO.CORRECTION L:APPLICATION SERIAL NO.CORRECTION
T:APPLICATION CORRECTION Z:REMARKS CHANGE

August 12, 2007

HONDA POWER PRODUCTS

PARTS CATALOGUE NEWS

Honda Motor Co., Ltd. Service Division

CODE NO.	BOOKLET TYPE	13Z4P601
	MICRO-FICHE	13Z4P6EA/FA
PARTS CATALOGUE NEWS	GXV160UH2	
NEWS NO.	016	

PARTS CATALOGUE - CORRECTED

Printed in Japan

Block No.	Ref. No.	Note	Part No.	Description	Reqd. QTY GXV 160 UH2	Serial No.	Parts catalogue code
E-3			CYLINDER BARREL				

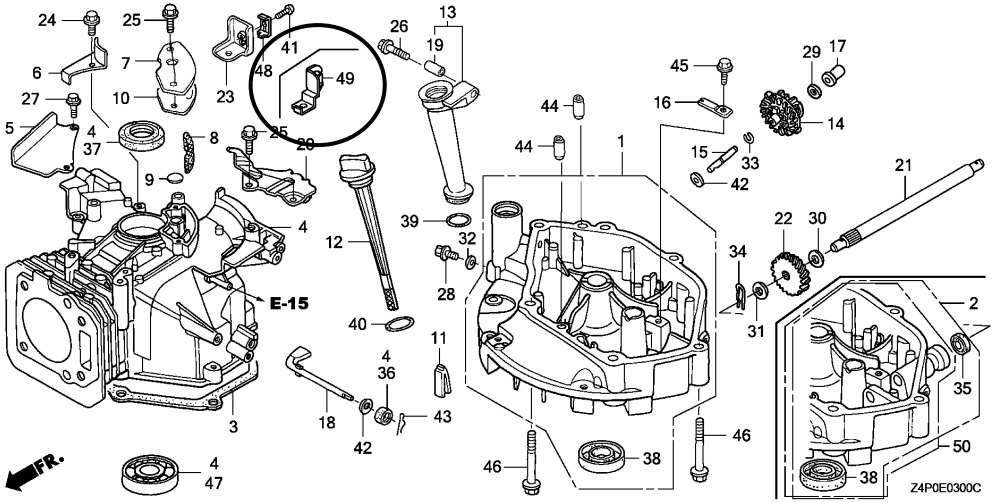

E-3	23	L	43143-Z1V-000	BASE COMP., HOLDER	1	------- -------	A1S, A1SA, A14

NOTE A:PART NO. CHANGE D:NEWLY PROVIDED E:PART NO. DELETION K:REQUIRED NO. CORRECTION L:APPLICATION SERIAL NO. CORRECTION
T:APPLICATION CORRECTION Z:REMARKS CHANGE

Block No.	Ref. No.	Note	Part No.	Description	Reqd.QTY GXV 160 UH2	Serial No.		Parts catalogue code
					1	-------	1049555	A1AS,A1T,A12
	41	L	93500-05016-0A	SCREW, PAN, 5X16	1	-------	-------	A1S,A1SA,A14
					1	-------	1049555	A1AS,A1T,A12
	48	L	16576-891-000	HOLDER, CABLE	1	-------	-------	A1S,A1SA,A14
					1	-------	1049555	A1AS,A1T,A12
	49	D	16617-Z4P-000	HOLDER, CABLE	1	1049556	-------	A1AS,A1T,A12

E-17 FUEL TANK

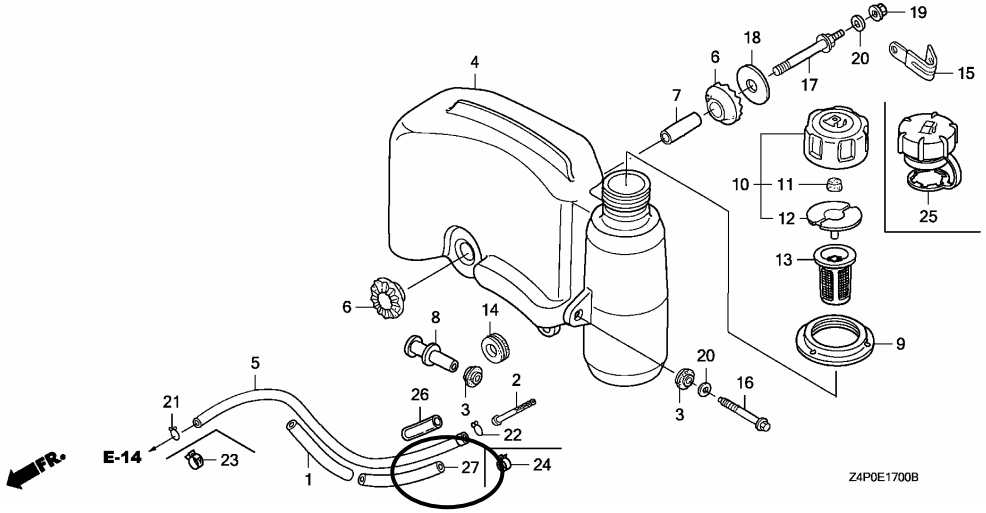

E-17	1	K	16854-ZH8-000	RUBBER, SUPPORTER (107MM)	1			
	5	L	17512-Z4P-003	TUBE, FUEL (FKM)	1	1011284	1038739	A1S,A1SA,A14,N1,N1F,N15,N4,N45,N5M,N55,SFL,SFL1,SFY,SFY1 T1AH
		T	17512-Z4P-013	.....	1	-------	-------	A1AS,A1T,A12,N1AH,N1F1,N12
					1	1038740	-------	A1S,A1SA,A14,N1,N1F,N15,N4,N45,N5M,N55,SFL,SFL1,SFY,SFY1 T1AH

NOTE A:PART NO.CHANGE D:NEWLY PROVIDED E:PART NO.DELETION K:REQUIRED NO.CORRECTION L:APPLICATION SERIAL NO.CORRECTION
T:APPLICATION CORRECTION Z:REMARKS CHANGE

BOOKNo.:13Z4P601

Block No.	Ref. No.	Note	Part No.	Description	Reqd.QTY GXV 160 UH2	Serial No.		Parts catalogue code
	26	T	95003-25003-20	TUBE, VINYL, 9X11X30 (95003-25001-10M)	1	-------	-------	A1AS,A1T,A12,N1AH,N1F1,N12
					1	1038740	-------	A1S,A1SA,A14,N1,N1F,N15,N4,N45,N5M,N55,SFL,SFL1,SFY,SFY1 T1AH
	27	D	16854-ZH8-000	RUBBER, SUPPORTER (107MM)	1	-------	1038739	A1S,A1SA,A14,N1,N1F,N15,N4,N45,N5M,N55,SFL,SFL1,SFY,SFY1 T1AH

NOTE A:PART NO.CHANGE D:NEWLY PROVIDED E:PART NO.DELETION K:REQUIRED NO.CORRECTION L:APPLICATION SERIAL NO.CORRECTION
T:APPLICATION CORRECTION Z:REMARKS CHANGE

September 09,2007

HONDA POWER PRODUCTS

PARTS CATALOGUE NEWS

Honda Motor Co., Ltd. Service Division

CODE NO.	BOOKLET TYPE	13Z4P601
	MICRO-FICHE	13Z4P6EA/FA
PARTS CATALOGUE NEWS	GXV160UH2	
NEWS NO.	017	

PARTS CATALOGUE - CORRECTED

Printed in Japan

Block No.	Ref. No.	Note	Part No.	Description	Reqd.QTY GXV 160 UH2	Serial No.		Parts catalogue code
E-11	1	T	28400-Z1V-003ZA	STARTER ASSY., RECOIL *NH1*.....BLACK	1	-------	-------	SFL1,SFY1,T1AH
	2	T	28410-Z1V-003ZB	CASE COMP., RECOIL STARTER *NH1*.....BLACK	1	-------	-------	A1AS,A1S,A1SA,A1T,A12,A14,N1AH,N1F,N1F1,N15,N45,N5M,N55 SFL1,SFY1,T1AH
E-12	1	T	19610-Z1V-000ZB	COVER COMP., FAN *NH1*.....BLACK	1	-------	-------	A1AS,A1S,A1SA,A1T,A12,A14,N1AH,N1F,N1F1,N15,N45,N5M,N55 SFL1,SFY1,T1AH

NOTE A:PART NO.CHANGE D:NEWLY PROVIDED E:PART NO.DELETION K:REQUIRED NO.CORRECTION L:APPLICATION SERIAL NO.CORRECTION
T:APPLICATION CORRECTION Z:REMARKS CHANGE

September 23,2007

HONDA POWER PRODUCTS

PARTS CATALOGUE NEWS

Honda Motor Co., Ltd. Service Division

CODE NO.	BOOKLET TYPE	13Z4P601
	MICRO-FICHE	13Z4P6EA/FA
PARTS CATALOGUE NEWS	GXV160UH2	
NEWS NO.	018	

PARTS CATALOGUE - CORRECTED

Printed in Japan

Block No.	Ref. No.	Note	Part No.	Description	Reqd.QTY GXV 160 UH2	Serial No.		Parts catalogue code
E-3	23	L	43143-Z1V-000	BASE COMP., HOLDER	1	-------	-------	A1S,A1SA,A14
					1	-------	1049555	A1AS,A1T,A12
					1	1068369	-------	A1T
	41	L	93500-05016-0A	SCREW, PAN, 5X16	1	-------	-------	A1S,A1SA,A14
					1	-------	1049555	A1AS,A1T,A12
					1	1068369	-------	A1T
	48	L	16576-891-000	HOLDER, CABLE	1	-------	-------	A1S,A1SA,A14
					1	-------	1049555	A1AS,A1T,A12
					1	1068369	-------	A1T
	49	L	16617-Z4P-000	HOLDER, CABLE	1	1049556	-------	A1AS,A12
					1	1049556	1068368	A1T

NOTE A:PART NO.CHANGE D:NEWLY PROVIDED E:PART NO.DELETION K:REQUIRED NO.CORRECTION L:APPLICATION SERIAL NO.CORRECTION
T:APPLICATION CORRECTION Z:REMARKS CHANGE

September 30, 2007

HONDA POWER PRODUCTS

PARTS CATALOGUE NEWS

Honda Motor Co., Ltd. Service Division

CODE NO.	BOOKLET TYPE	13Z4P601
	MICRO-FICHE	13Z4P6EA/FA
PARTS CATALOGUE NEWS	GXV160UH2	
NEWS NO.	019	

PARTS CATALOGUE - CORRECTED

Printed in Japan

Block No.	Ref. No.	Note	Part No.	Description	Reqd. QTY GXV 160 UH2	Serial No.		Parts catalogue code
E-11	1	L	28400-Z1V-003ZA	STARTER ASSY., RECOIL *NH1*.....BLACK	1	-------	-------	SFL1, SFY1
					1	-------	1050545	T1AH
		T	28400-Z4P-801ZA	STARTER ASSY., RECOIL (LONG ROPE) *NH1*.....BLACK	1	-------	-------	A1T
					1	1050546	-------	T1AH
	10	T	28461-ZE1-003	KNOB, RECOIL STARTER	1	-------	-------	A1AS, A1S, A1SA, A1T, A12, A14, N1AH, N1F, N1F1, N12, N15, N45, N5M N55
					1	1050546	-------	T1AH
	11	L	28461-ZH8-003	GRIP, STARTER	1	-------	-------	N1, N4, SFL, SFL1, SFY, SFY1
					1	-------	1050545	T1AH
	12	L	28462-ZH8-003	ROPE, RECOIL STARTER	1	-------	-------	N1, N4, SFL, SFL1, SFY, SFY1
					1	-------	1050545	T1AH
		T	28462-Z1V-801	ROPE, RECOIL STARTER (LONG) (2360MM)	1	-------	-------	A1AS, A1S, A1SA, A12, A14, N1AH, N1F, N1F1, N12, N15, N45, N5M, N55

NOTE A:PART NO.CHANGE D:NEWLY PROVIDED E:PART NO.DELETION K:REQUIRED NO.CORRECTION L:APPLICATION SERIAL NO.CORRECTION
T:APPLICATION CORRECTION Z:REMARKS CHANGE

BOOKNo.:13Z4P601

Block No.	Ref. No.	Note	Part No.	Description	Reqd.QTY GXV 160 UH2	Serial No.			Parts catalogue code
					1	1050546	-------	T1AH	

NOTE A:PART NO.CHANGE D:NEWLY PROVIDED E:PART NO.DELETION K:REQUIRED NO.CORRECTION L:APPLICATION SERIAL NO.CORRECTION
T:APPLICATION CORRECTION Z:REMARKS CHANGE

November 25, 2007

HONDA POWER PRODUCTS

PARTS CATALOGUE NEWS

Honda Motor Co., Ltd. Service Division

CODE NO.	BOOKLET TYPE	13Z4P601
	MICRO-FICHE	13Z4P6EA/FA
PARTS CATALOGUE NEWS	GXV160UH2	
NEWS NO.	020	

PARTS CATALOGUE - CORRECTED

Printed in Japan

Block No.	Ref. No.	Note	Part No.	Description	Reqd. QTY GXV 160 UH2	Serial No.	Parts catalogue code
E-3				CYLINDER BARREL			

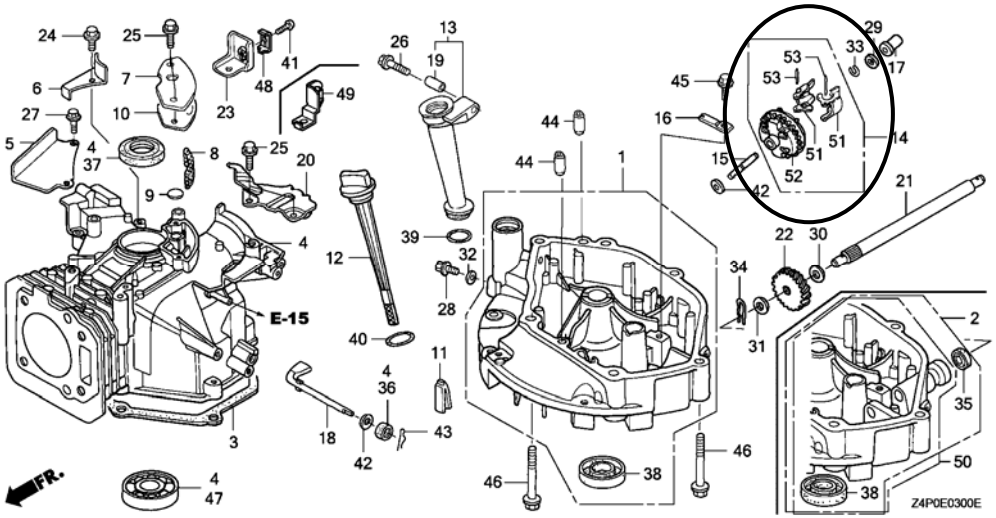

E-3	51	D	16511-ZE1-000	WEIGHT, GOVERNOR	2	

NOTE A:PART NO.CHANGE D:NEWLY PROVIDED E:PART NO.DELETION K:REQUIRED NO.CORRECTION L:APPLICATION SERIAL NO.CORRECTION
T:APPLICATION CORRECTION Z:REMARKS CHANGE

BOOKNo.:13Z4P601

Block No.	Ref. No.	Note	Part No.	Description	Reqd.QTY GXV 160 UH2	Serial No.	Parts catalogue code
	52	D	16512-ZE6-000	HOLDER, GOVERNOR WEIGHT	1		
	53	D	16513-ZE1-000	PIN, GOVERNOR WEIGHT	2		

NOTE A:PART NO.CHANGE D:NEWLY PROVIDED E:PART NO.DELETION K:REQUIRED NO.CORRECTION L:APPLICATION SERIAL NO.CORRECTION
T:APPLICATION CORRECTION Z:REMARKS CHANGE

November 23, 2007

HONDA POWER PRODUCTS

PARTS CATALOGUE NEWS

Honda Motor Co., Ltd. Service Division

CODE NO.	BOOKLET TYPE	13Z4P601
	MICRO-FICHE	13Z4P6EA/FA
PARTS CATALOGUE NEWS	GXV160UH2	
NEWS NO.	021	

Printed in Japan

GXV160UH2-N5AH type sales information

NOTE: This Parts Catalogue News explains only the parts of the different model that are produced to conform to addition of the GXV160UH2-N5AH type.
As for the parts not listed on this Parts Catalogue News, use the parts of the GXV160UH2-N1AH type.

BOOKNo.:13Z4P601

• Models, parts catalogue codes and applicable serial numbers

Model	Type		Parts catalogue type	Applicable engine serial No.	Applicable carburetor identification No.
GXV160UH2	N1AH	Base type	N1AH	GJABH-1000001~	BE66N A
	N5AH	Additional type	N5AH		

• Features of each type

Specifications \ Type		Base type	Additional type
Model		GXV160UH2	
Crankshaft	22.2mm Ø Straight	●	
	25.4mm Ø Straight (Flat key-way)		
	25.4mm Ø Straight		●
	20mm Ø Steped thread		
	5/8" Stepped thread		
	M8 Tapered		
	25mm Ø Straight		
Flywheel brake			

BOOKNo.:13Z4P601

Block No.	Ref. No.	Part No.	Description	Reqd.QTY GXV 160 UH2	Base Part No.	Parts catalogue code
E-7	7		CRANKSHAFT COMP.	0	13310-ZE7-010	
	9	13310-ZE7-661	CRANKSHAFT COMP.	1		
E-11	1		STARTER ASSY., RECOIL (LONG ROPE)		28400-Z1V-801ZB	
			R280.....POWER RED	0		
	2		CASE COMP., RECOIL STARTER		28410-Z1V-003ZA	
			R280.....POWER RED	0		
E-12	1		COVER COMP., FAN		19610-Z1V-000ZA	
			R280.....POWER RED	0		

February 25, 2008

HONDA POWER PRODUCTS

PARTS CATALOGUE NEWS

Honda Motor Co., Ltd. Service Division

CODE NO.	BOOKLET TYPE	13Z4P601
	MICRO-FICHE	13Z4P6EA/FA
PARTS CATALOGUE NEWS	GXV160UH2	
NEWS NO.	022	

PARTS CATALOGUE - CORRECTED

Printed in Japan

Block No.	Ref. No.	Note	Part No.	Description	Reqd. QTY GXV 160 UH2	Serial No.	Parts catalogue code

E-3 CYLINDER BARREL

ILLUSTRATION CORRECTED

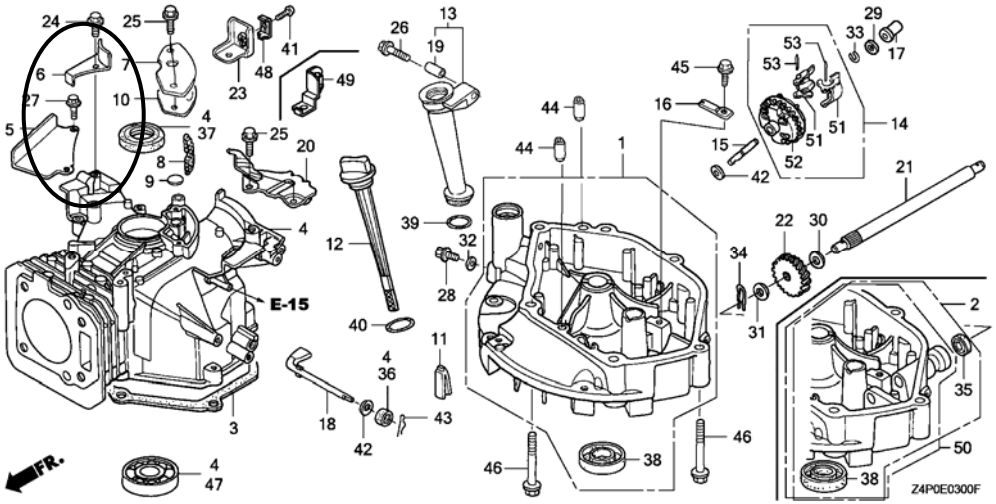

NOTE A:PART NO.CHANGE D:NEWLY PROVIDED E:PART NO.DELETION K:REQUIRED NO.CORRECTION L:APPLICATION SERIAL NO.CORRECTION
T:APPLICATION CORRECTION Z:REMARKS CHANGE

March 09, 2008

HONDA POWER PRODUCTS

PARTS CATALOGUE NEWS

Honda Motor Co., Ltd. Service Division

CODE NO.	BOOKLET TYPE	13Z4P601
	MICRO-FICHE	13Z4P6EA/FA
PARTS CATALOGUE NEWS	GXV160UH2	
NEWS NO.	023	

PARTS CATALOGUE - CORRECTED

Printed in Japan

Block No.	Ref. No.	Note	Part No.	Description	Reqd. QTY GXV 160 UH2	Serial No.		Parts catalogue code
E-3	22	Z	23421-ZE6-000	GEAR, DRIVEN (22T)	1	-------	-------	SFL,SFL1,SFY1

PARTS NAME CORRECTED

NOTE A:PART NO.CHANGE D:NEWLY PROVIDED E:PART NO.DELETION K:REQUIRED NO.CORRECTION L:APPLICATION SERIAL NO.CORRECTION
T:APPLICATION CORRECTION Z:REMARKS CHANGE

April 04, 2008

HONDA POWER PRODUCTS

PARTS CATALOGUE NEWS

Honda Motor Co., Ltd. Service Division

CODE NO.	BOOKLET TYPE	13Z4P601
	MICRO-FICHE	13Z4P6EA/FA
PARTS CATALOGUE NEWS	GXV160UH2	
NEWS NO.	024	

Printed in Japan

GXV160UH2-N1MH type sales information

NOTE: This Parts Catalogue News explains only the parts of the different model that are produced to conform to addition of the GXV160UH2-N1MH type.
As for the parts not listed on this Parts Catalogue News, use the parts of the GXV160UH2-N1AH type.

BOOKNo.:13Z4P601

• Models, parts catalogue codes and applicable serial numbers

Model	Type		Parts catalogue type	Applicable engine serial No.	Applicable carburetor identification No.
GXV160UH2	N1AH	Base type	N1AH	GJABH-1000001~	BE66N A
	N1MH	Additional type	N1MH		

• Features of each type

Specifications	Type / Model	Base type	Additional type
	Model	GXV160UH2	
	Type	N1AH	N1MH
Crankshaft	22.2mm Ø Straight	●	●
	25.4mm Ø Straight (Flat key-way)		
	25.4mm Ø Straight		
	20mm Ø Stepped thread		
	5/8" Stepped thread		
	M8 Tapered		
	25mm Ø Straight		
Flywheel brake			

BOOKNo.:13Z4P601

Block No.	Ref. No.	Part No.	Description	Reqd.QTY GXV 160 UH2	Base Part No.	Parts catalogue code
E-11	1	28400-Z1V-003ZB	STARTER ASSY., RECOIL *R280*.....POWER RED	1		
			STARTER ASSY., RECOIL (LONG ROPE) *NH1*.....BLACK	0	28400-Z1V-801ZA	
			STARTER ASSY., RECOIL (LONG ROPE) *R280*.....POWER RED	0	28400-Z1V-801ZB	
	2		CASE COMP., RECOIL STARTER *NH1*.....BLACK	0	28410-Z1V-003ZB	
	10		KNOB, RECOIL STARTER	0	28461-ZE1-003	
	11	28461-ZH8-003	GRIP, STARTER	1		
	12	28462-ZH8-003	ROPE, RECOIL STARTER	1	28462-Z1V-801	
E-12	1		COVER COMP., FAN *NH1*.....BLACK	0	19610-Z1V-000ZB	

April 20, 2008

HONDA POWER PRODUCTS

PARTS CATALOGUE NEWS

Honda Motor Co., Ltd. Service Division

CODE NO.	BOOKLET TYPE	13Z4P601
	MICRO-FICHE	13Z4P6EA/FA
PARTS CATALOGUE NEWS	GXV160UH2	
NEWS NO.	025	

PARTS CATALOGUE - CORRECTED

Printed in Japan

Block No.	Ref. No.	Note	Part No.	Description	Reqd. QTY GXV 160 UH2	Serial No.	Parts catalogue code
E-3			CYLINDER BARREL				

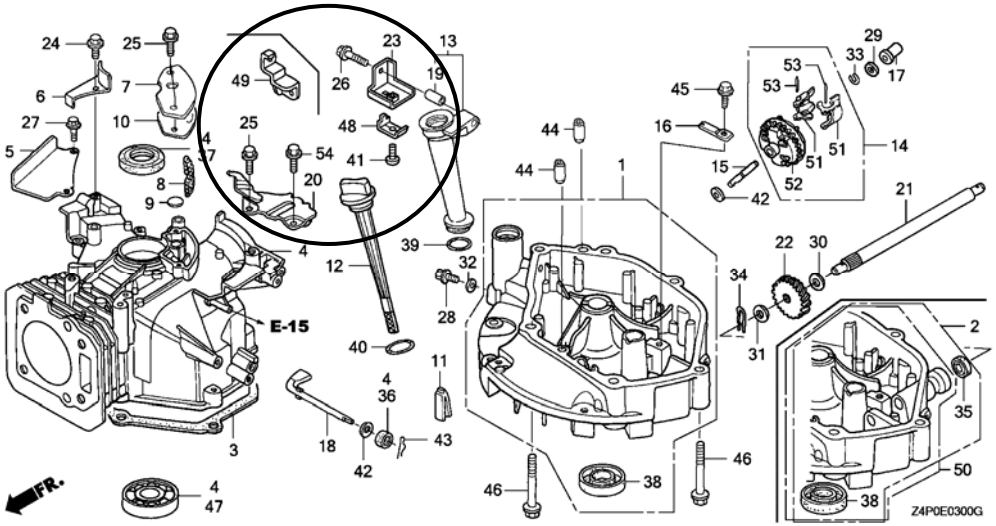

E-3	25	K	90014-952-000	BOLT, FLANGE, 6X14(CT200)	3	

NOTE A:PART NO.CHANGE D:NEWLY PROVIDED E:PART NO.DELETION K:REQUIRED NO.CORRECTION L:APPLICATION SERIAL NO.CORRECTION
T:APPLICATION CORRECTION Z:REMARKS CHANGE

BOOKNo.:13Z4P601

Block No.	Ref. No.	Note	Part No.	Description	Reqd.QTY GXV 160 UH2	Serial No.	Parts catalogue code
	54	D	90014-952-000	BOLT, FLANGE, 6X14(CT200)	1	------- -------	N1,N1AH,N1F,N1F1,N1MH,N12,N15,N4,N45,N5AH,N5M,N55,SFL SFL1,SFY,SFY1,T1AH

NOTE A:PART NO.CHANGE D:NEWLY PROVIDED E:PART NO.DELETION K:REQUIRED NO.CORRECTION L:APPLICATION SERIAL NO.CORRECTION
T:APPLICATION CORRECTION Z:REMARKS CHANGE

May 04, 2008

HONDA POWER PRODUCTS

PARTS CATALOGUE NEWS

Honda Motor Co., Ltd. Service Division

CODE NO.	BOOKLET TYPE	13Z4P601
	MICRO-FICHE	13Z4P6EA/FA
PARTS CATALOGUE NEWS	GXV160UH2	
NEWS NO.	026	

PARTS CATALOGUE - CORRECTED

Printed in Japan

Block No.	Ref. No.	Note	Part No.	Description	Reqd. QTY GXV 160 UH2	Serial No.		Parts catalogue code
E-17	5	T	17512-Z4P-013	TUBE, FUEL (FKM)	1	-------	-------	A1AS, A1T, A12, N1AH, N1F1, N12, N5AH
					1	1038740	-------	A1S, A1SA, A14, N1, N1F, N15, N4, N45, N5M, N55, SFL, SFL1, SFY, SFY1 T1AH
		D	17512-Z4P-023	.....	1	-------	-------	N1MH

NOTE A:PART NO.CHANGE D:NEWLY PROVIDED E:PART NO.DELETION K:REQUIRED NO.CORRECTION L:APPLICATION SERIAL NO.CORRECTION
T:APPLICATION CORRECTION Z:REMARKS CHANGE

June 08, 2008

HONDA POWER PRODUCTS

PARTS CATALOGUE NEWS

Honda Motor Co., Ltd. Service Division

CODE NO.	BOOKLET TYPE	13Z4P601
	MICRO-FICHE	13Z4P6EA/FA
PARTS CATALOGUE NEWS	GXV160UH2	
NEWS NO.	027	

PARTS CATALOGUE - CORRECTED

Printed in Japan

Block No.	Ref. No.	Note	Part No.	Description	Reqd. QTY GXV 160 UH2	Serial No.		Parts catalogue code
E-11	1	T	28400-Z1V-003ZA	STARTER ASSY., RECOIL *NH1*.....BLACK	1	-------	-------	SFL1, SFY1
					1	-------	1050545	T1AH
					1	1090102	-------	N5AH
		L	28400-Z1V-801ZA	STARTER ASSY., RECOIL (LONG ROPE) *NH1*.....BLACK	1	-------	-------	A1AS, A1S, A1SA, A12, A14, N1AH, N1F, N1F1, N15, N45, N5M, N55
					1	-------	1090101	N5AH
	10	L	28461-ZE1-003	KNOB, RECOIL STARTER	1	-------	-------	A1AS, A1S, A1SA, A1T, A12, A14, N1AH, N1F, N1F1, N12, N15, N45, N5M N55
					1	-------	1090101	N5AH
					1	1050546	-------	T1AH
	11	T	28461-ZH8-003	GRIP, STARTER	1	-------	-------	N1, N1MH, N4, SFL, SFL1, SFY, SFY1
					1	-------	1050545	T1AH
					1	.1090102	-------	N5AH

NOTE A:PART NO.CHANGE D:NEWLY PROVIDED E:PART NO.DELETION K:REQUIRED NO.CORRECTION L:APPLICATION SERIAL NO.CORRECTION
T:APPLICATION CORRECTION Z:REMARKS CHANGE

BOOKNo.:13Z4P601

Block No.	Ref. No.	Note	Part No.	Description	Reqd.QTY GXV 160 UH2	Serial No.		Parts catalogue code
	12	T	28462-ZH8-003	ROPE, RECOIL STARTER	1	-------	-------	N1,N1MH,N4,SFL,SFL1,SFY,SFY1
					1	-------	1050545	T1AH
					1	1090102	-------	N5AH
		L	28462-Z1V-801	ROPE, RECOIL STARTER (LONG) (2360MM)	1	-------	-------	A1AS,A1S,A1SA,A12,A14,N1AH,N1F,N1F1,N12,N15,N45,N5M,N55
					1	-------	1090101	N5AH
					1	1050546	-------	T1AH

NOTE A:PART NO.CHANGE D:NEWLY PROVIDED E:PART NO.DELETION K:REQUIRED NO.CORRECTION L:APPLICATION SERIAL NO.CORRECTION
T:APPLICATION CORRECTION Z:REMARKS CHANGE

December 19, 2008

HONDA POWER PRODUCTS

PARTS CATALOGUE NEWS

Honda Motor Co., Ltd. Service Division

CODE NO.	BOOKLET TYPE	13Z4P601
	MICRO-FICHE	13Z4P6EA/FA
PARTS CATALOGUE NEWS	GXV160UH2	
NEWS NO.	028	

Printed in Japan

GXV160UH2-SFL2 and SFL4 types sales information

NOTE: This Parts Catalogue News explains only the parts of the different model that are produced to conform to addition of the GXV160UH2-SFL2 and SFL4 types.
As for the parts not listed on this Parts Catalogue News, use the parts of the GXV160UH2-SFL1 type.

• Models, parts catalogue codes and applicable serial numbers

Model	Type		Parts catalogue type	Applicable engine serial No.	Applicable carburetor identification No.
GXV160UH2	SFL1	Base type	SFL1	GJABH-1000001~	BE66J A,BE66N A
	SFL2	Additional type	SFL2		BE66N A
	SFL4		SFL4		

• Features of each type

		Base type	Additional type	
	Model	GXV160UH2		
Specifications	**Type**	SFL1	SFL2	SFL4
Crankshaft	22.2mm ø Straight			
	25.4mm ø Straight (Flat key-way)			
	25.4mm ø Straight			
	20mm ø Stepped thread	●	●	●
	5/8" Stepped thread			
	M8 Tapered			
	25mm ø Straight			
Flywheel brake				

BOOKNo.:13Z4P601

Block No.	Ref. No.	Part No.	Description	Reqd.QTY GXV 160 UH2	Base Part No.	Parts catalogue code
E-3	22	23431-ZG9-T20	GEAR, DRIVEN (18T)	1	23421-ZE6-000	SFL4
E-9	2	14100-ZE7-N40	CAMSHAFT ASSY.	1	14100-ZE7-770	SFL4
	6	14451-Z7E-000	PIVOT, ROCKER ARM	2	14451-ZE1-013	
E-11	1		STARTER ASSY., RECOIL *R280*.....POWER RED	0	28400-Z1V-003ZB	SFL2
		28400-Z1V-801ZA	STARTER ASSY., RECOIL (LONG ROPE) *NH1*.....BLACK	1	28400-Z1V-003ZA	SFL2
	2		CASE COMP., RECOIL STARTER *R280*.....POWER RED	0	28410-Z1V-003ZA	SFL2
	10	28461-ZE1-003	KNOB, RECOIL STARTER	1		SFL2
	11		GRIP, STARTER	0	28461-ZH8-003	SFL2
	12	28462-Z1V-801	ROPE, RECOIL STARTER (LONG) (2360MM)	1	28462-ZH8-003	SFL2
E-12	1		COVER COMP., FAN *R280*.....POWER RED	0	19610-Z1V-000ZA	SFL2
E-14	3	16013-Z0S-B01	FLOAT SET	1	16013-Z0S-B01	
	8	16045-Z1V-G01	CHOKE SET	1	16045-Z1V-G01	
	11	16166-Z1V-801	NOZZLE, MAIN	1	16166-Z1V-801	
	21	99101-ZH8-0650	JET, MAIN, #65	(1)	99101-ZH8-0650	
		99101-ZH8-0680	JET, MAIN, #68	1	99101-ZH8-0680	
E-17	4	17510-Z4P-800	TANK COMP., FUEL	1	17510-Z4P-000	
	5	17512-Z4P-023	TUBE, FUEL (FKM)	1	17512-Z4P-013	
	27		RUBBER, SUPPORTER (107MM)	0	16854-ZH8-000	
E-22	17	46392-Z1V-003	CLAMP, HARNESS	1	46392-SC2-003	
	21	90659-Z1V-003	CLIP, HARNESS	1	90659-680-013	

January 01, 2009

HONDA POWER PRODUCTS

PARTS CATALOGUE NEWS

Honda Motor Co., Ltd. Service Division

CODE NO.	BOOKLET TYPE	13Z4P601
	MICRO-FICHE	13Z4P6EA/FA
PARTS CATALOGUE NEWS	GXV160UH2	
NEWS NO.	029	

PARTS CATALOGUE - CORRECTED

Printed in Japan

Block No.	Ref. No.	Note	Part No.	Description	Reqd. QTY GXV 160 UH2	Serial No.		Parts catalogue code
E-2	5	L	12251-ZE7-000	GASKET, CYLINDER HEAD	1	-------	1116222	A1AS, A1S, A1SA, A1T, A12, A14, N1, N1AH, N1F, N1F1, N1MH, N12, N15 N4, N45, N5AH, N5M, N55, SFL, SFL1, SFY, SFY1, T1AH
		T	12251-Z1V-003	.....	1	-------	-------	SFL2, SFL4
					1	1116223	-------	A1AS, A1S, A1SA, A1T, A12, A14, N1, N1AH, N1F, N1F1, N1MH, N12, N15 N4, N45, N5AH, N5M, N55, SFL, SFL1, SFY, SFY1, T1AH

NOTE A:PART NO.CHANGE D:NEWLY PROVIDED E:PART NO.DELETION K:REQUIRED NO.CORRECTION L:APPLICATION SERIAL NO.CORRECTION
T:APPLICATION CORRECTION Z:REMARKS CHANGE

February 15, 2009

HONDA POWER PRODUCTS

PARTS CATALOGUE NEWS

Honda Motor Co., Ltd. Service Division

CODE NO.	BOOKLET TYPE	13Z4P601
	MICRO-FICHE	13Z4P6EA/FA
PARTS CATALOGUE NEWS	GXV160UH2	
NEWS NO.	030	

PARTS CATALOGUE - CORRECTED

Printed in Japan

Block No.	Ref. No.	Note	Part No.	Description	Reqd. QTY GXV 160 UH2	Serial No.	Parts catalogue code
E-11	1	T	28400-Z1V-801ZB	STARTER ASSY., RECOIL (LONG ROPE) *R280*.....POWER RED	1	------- -------	A1AS, A1S, A1SA, A12, A14, N1AH, N1F, N12, N15, N45, N5M, N55, SFL2
	2	T	28410-Z1V-003ZA	CASE COMP., RECOIL STARTER *R280*.....POWER RED	1	------- -------	A1AS, A1S, A1SA, A1T, A12, A14, N1, N1AH, N1F, N1MH, N12, N15, N4, N45 N5M, N55, SFL, SFL1, SFL2, SFL4, SFY, SFY1
E-12	1	T	19610-Z1V-000ZA	COVER COMP., FAN *R280*.....POWER RED	1	------- -------	A1AS, A1S, A1SA, A1T, A12, A14, N1, N1AH, N1F, N1MH, N12, N15, N4, N45 N5M, N55, SFL, SFL1, SFL2, SFL4, SFY, SFY1

NOTE A:PART NO.CHANGE D:NEWLY PROVIDED E:PART NO.DELETION K:REQUIRED NO.CORRECTION L:APPLICATION SERIAL NO.CORRECTION
T:APPLICATION CORRECTION Z:REMARKS CHANGE

February 22, 2009

HONDA POWER PRODUCTS

PARTS CATALOGUE NEWS

Honda Motor Co., Ltd. Service Division

CODE NO.	BOOKLET TYPE	13Z4P601
	MICRO-FICHE	13Z4P6EA/FA
PARTS CATALOGUE NEWS	GXV160UH2	
NEWS NO.	031	

PARTS CATALOGUE - CORRECTED

Printed in Japan

Block No.	Ref. No.	Note	Part No.	Description	Reqd. QTY GXV 160 UH2	Serial No.		Parts catalogue code
E-17	5	L	17512-Z4P-013	TUBE, FUEL (FKM)	1	-------	1123369	A1AS, A1T, A12, N1AH, N1F1, N12, N5AH
					1	1038740	1123369	A1S, A1SA, A14, N1, N1F, N15, N4, N45, N5M, N55, SFL, SFL1, SFY, SFY1 T1AH
		T	17512-Z4P-023	.....	1	-------	-------	N1MH, SFL2, SFL4
					1	1123370	-------	A1AS, A1S, A1SA, A1T, A12, A14, N1, N1AH, N1F, N1F1, N12, N15, N4, N45 N5AH, N5M, N55, SFL, SFL1, SFY, SFY1, T1AH

NOTE A:PART NO.CHANGE D:NEWLY PROVIDED E:PART NO.DELETION K:REQUIRED NO.CORRECTION L:APPLICATION SERIAL NO.CORRECTION
T:APPLICATION CORRECTION Z:REMARKS CHANGE

March 08, 2009

HONDA POWER PRODUCTS

PARTS CATALOGUE NEWS

Honda Motor Co., Ltd. Service Division

CODE NO.	BOOKLET TYPE	13Z4P601
	MICRO-FICHE	13Z4P6EA/FA
PARTS CATALOGUE NEWS	GXV160UH2	
NEWS NO.	032	

PARTS CATALOGUE - CORRECTED

Printed in Japan

Block No.	Ref. No.	Note	Part No.	Description	Reqd. QTY GXV 160 UH2	Serial No.	Parts catalogue code
PARTS NAME CORRECTED							
E-28	3	Z	87516-Z4N-810	MARK, OPERATOR CAUTION (PICTOGRAPH) (MADE IN CHINA)	(1)		
	4	Z	87516-Z4N-800	MARK, OPERATOR CAUTION (FRENCH) (MADE IN CHINA)	1		

NOTE A:PART NO.CHANGE D:NEWLY PROVIDED E:PART NO.DELETION K:REQUIRED NO.CORRECTION L:APPLICATION SERIAL NO.CORRECTION
T:APPLICATION CORRECTION Z:REMARKS CHANGE

May 30, 2009

HONDA POWER PRODUCTS

PARTS CATALOGUE NEWS

Honda Motor Co., Ltd. Service Division

CODE NO.	BOOKLET TYPE	13Z4P601
	MICRO-FICHE	13Z4P6EA/FA
PARTS CATALOGUE NEWS	GXV160UH2	
NEWS NO.	033	

Printed in Japan

GXV160UH2-A12W type sales information

NOTE: This Parts Catalogue News explains only the parts of the different model that are produced to conform to addition of the GXV160UH2-A12W type.
As for the parts not listed on this Parts Catalogue News, use the parts of the GXV160UH2-A12 type.

• Models, parts catalogue codes and applicable serial numbers

Model	Type		Parts catalogue type	Applicable engine serial No.	Applicable carburetor identification No.
GXV160UH2	A12	Base type	A12	GJABH-1000001~	BE66N A
	A12W	Additional type	A12W		

• Features of each type

Specifications \ Model	Type	Base type	Additional type
	Model	GXV160UH2	
	Type	A12	A12W
Crankshaft	22.2mm ø Straight	●	●
	25.4mm ø Straight (Flat key-way)		
	25.4mm ø Straight		
	20mm ø Stepped thread		
	5/8" Stepped thread		
	M8 Tapered		
	25mm ø Straight		
Flywheel brake		●	●

Block No.	Ref. No.	Part No.	Description	Reqd.QTY GXV 160 UH2	Base Part No.	Parts catalogue code

E-7 CRANKSHAFT/PISTON

Ref. No.	LON	(Relative ref. Number) Description	FRT
5		(6,7,8,9,10,15,16)	
	1101F0	CRANKSHAFT	1.1

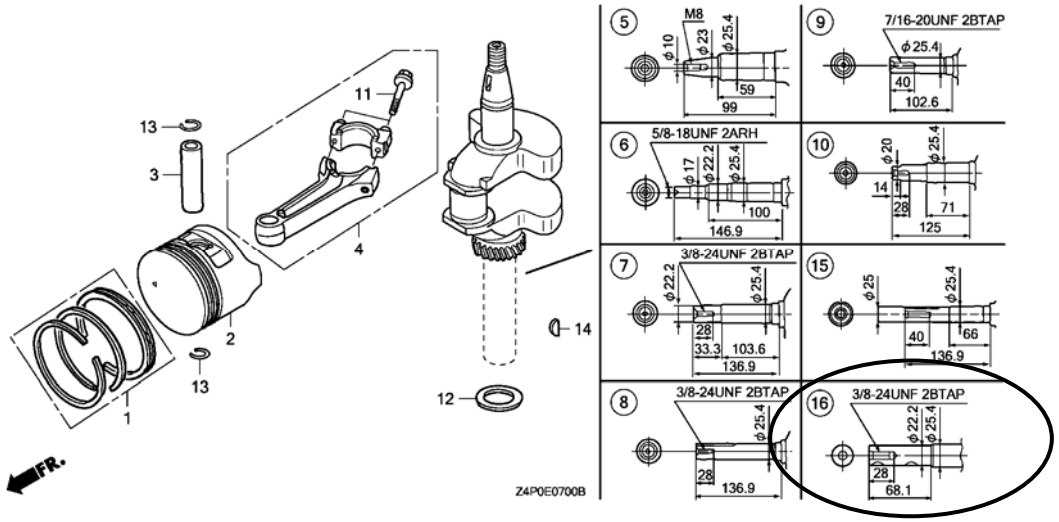

E-7	7		CRANKSHAFT COMP.	0	13310-ZE7-010
	16	13310-ZE7-800	CRANKSHAFT COMP.	1	
E-9	6	14451-Z7E-000	PIVOT, ROCKER ARM	2	14451-ZE1-013
E-11	1		STARTER ASSY., RECOIL (LONG ROPE)		28400-Z1V-801ZA
			NH1.....BLACK	0	
	2		CASE COMP., RECOIL STARTER		28410-Z1V-003ZB
			NH1.....BLACK	0	
E-12	1		COVER COMP., FAN		19610-Z1V-000ZB
			NH1.....BLACK	0	
E-17	4	17510-Z4P-800	TANK COMP., FUEL	1	17510-Z4P-000
	15	90010-Z1V-800	CLIP, TUBE	1	90010-GE0-710
E-22	2		ARM, GOVERNOR	0	16551-ZE7-000
	3		ROD, GOVERNOR	0	16555-ZE7-000

BOOKNo.:13Z4P601

Block No.	Ref. No.	Part No.	Description	Reqd.QTY GXV 160 UH2	Base Part No.	Parts catalogue code
	4		SPRING, GOVERNOR	0	16561-ZE7-020	
	5		SPRING, THROTTLE RETURN	0	16562-ZE6-000	
	7		CONTROL ASSY.	0	16570-ZE7-020	
	8		ROD, CHOKE	0	16573-ZE7-000	
	9		SPRING, LEVER	0	16576-ZE7-300	
	10		HOLDER, CABLE	0	16576-891-000	
	11		SPRING, CONTROL ADJUSTING	0	16584-883-300	
	12		PROTECTOR, CONTROL	0	16585-ZE7-000	
	18		BOLT, FLANGE, 6X12(CT200)	0	90013-883-000	
	19		BOLT, GOVERNOR ARM	0	90015-ZE5-010	
	21		CLIP, WIRE HARNESS	0	90659-680-013	
	23		SCREW, PAN, 5X16	0	93500-05016-0A	
	24		SCREW, PAN, 5X20	0	93500-05020-0A	
	25		SCREW, PAN, 5X28	0	93500-05028-0A	
	26		NUT, FLANGE, 6MM	0	94050-06000	
	27		BOLT, FLANGE, 6X10	0	95701-06010-00	
E-22-1	2	16551-ZE7-000	ARM, GOVERNOR	1		
	3	16555-ZE7-000	ROD, GOVERNOR	1		
	4	16561-ZE7-020	SPRING, GOVERNOR	1		
	5	16562-ZE6-000	SPRING, THROTTLE RETURN	1		
	6	16570-ZE7-W00	CONTROL COMP. (STD.)	1		
	7	16573-ZE7-000	ROD, CHOKE	1		
	8	16576-ZE7-300	SPRING, LEVER	1		
	9	16576-891-000	HOLDER, CABLE	1		

BOOKNo.:13Z4P601

Block No.	Ref. No.	Part No.	Description	Reqd.QTY GXV 160 UH2	Base Part No.	Parts catalogue code
	10	16584-883-300	SPRING, CONTROL ADJUSTING	2		
	11	16585-ZE7-000	PROTECTOR, CONTROL	1		
	12	16599-ZG1-M10	COLLAR, STOPPER	1		
	17	90013-883-000	BOLT, FLANGE, 6X12(CT200)	2		
	18	90015-ZE5-010	BOLT, GOVERNOR ARM	1		
	19	90016-ZE7-W00	SCREW, RECESSED, 5X28	1		
	20	90659-Z1V-003	CLIP, HARNESS	1		
	22	93500-05016-0A	SCREW, PAN, 5X16	1		
	23	93500-05020-0A	SCREW, PAN, 5X20	1		
	24	94050-06000	NUT, FLANGE, 6MM	1		
	25	95701-06010-00	BOLT, FLANGE, 6X10	2		
E-28	3	87516-Z4N-010	MARK, OPERATOR CAUTION	1		
	4	87516-Z4N-801	MARK, OPERATOR CAUTION	1	87516-Z4N-800	

June 07, 2009

HONDA POWER PRODUCTS

PARTS CATALOGUE NEWS

Honda Motor Co., Ltd. Service Division

CODE NO.	BOOKLET TYPE	13Z4P601
	MICRO-FICHE	13Z4P6EA/FA
PARTS CATALOGUE NEWS	GXV160UH2	
NEWS NO.	034	

PARTS CATALOGUE - CORRECTED

Printed in Japan

Block No.	Ref. No.	Note	Part No.	Description	Reqd.QTY GXV 160 UH2	Serial No.		Parts catalogue code
E-16	4	T	18320-Z1V-000	PROTECTOR COMP., MUFFLER	1	-------	-------	A1AS, A1S, A1SA, A1T, A12, A14, N1, N1AH, N1F, N1F1, N1MH, N12, N15 N4, N45, N5AH, N5M, N55, SFL, SFL1, SFL2, SFL4, SFY, SFY1, T1AH
		A	18320-Z1V-010	.....	1	-------	-------	A12W

NOTE A:PART NO.CHANGE D:NEWLY PROVIDED E:PART NO.DELETION K:REQUIRED NO.CORRECTION L:APPLICATION SERIAL NO.CORRECTION
T:APPLICATION CORRECTION Z:REMARKS CHANGE

July 13, 2009

HONDA POWER PRODUCTS

PARTS CATALOGUE NEWS

Honda Motor Co., Ltd. Service Division

CODE NO.	BOOKLET TYPE	13Z4P601
	MICRO-FICHE	13Z4P6EA/FA
PARTS CATALOGUE NEWS	GXV160UH2	
NEWS NO.	035	

PARTS CATALOGUE - CORRECTED

Printed in Japan

Block No.	Ref. No.	Note	Part No.	Description	Reqd. QTY GXV 160 UH2	Serial No.		Parts catalogue code
E-16	1	T	06180-ZE6-820	ARRESTER KIT, SPARK	(1)	-------	-------	A1AS, A1S, A1SA, A1T, A12, A12W, A14, N1, N1AH, N1F, N1F1, N1MH, N12 N15, N4, N45, N5AH, N5M, N55, SFL, SFL1, SFL4, SFY, SFY1, T1AH
		D	06180-ZE6-820	.....	1	-------	-------	SFL2
	5	T	18355-888-810	ARRESTER, SPARK	(1)	-------	-------	A1AS, A1S, A1SA, A1T, A12, A12W, A14, N1, N1AH, N1F, N1F1, N1MH, N12 N15, N4, N45, N5AH, N5M, N55, SFL, SFL1, SFL4, SFY, SFY1, T1AH
		D	18355-888-810	.....	1	-------	-------	SFL2
	6	T	18381-ZE6-820	GASKET, MUFFLER	(1)	-------	-------	A1AS, A1S, A1SA, A1T, A12, A12W, A14, N1, N1AH, N1F, N1F1, N1MH, N12 N15, N4, N45, N5AH, N5M, N55, SFL, SFL1, SFL4, SFY, SFY1, T1AH
		D	18381-ZE6-820	.....	1	-------	-------	SFL2

NOTE A:PART NO.CHANGE D:NEWLY PROVIDED E:PART NO.DELETION K:REQUIRED NO.CORRECTION L:APPLICATION SERIAL NO.CORRECTION
T:APPLICATION CORRECTION Z:REMARKS CHANGE

July 19, 2009

HONDA POWER PRODUCTS

PARTS CATALOGUE NEWS

Honda Motor Co., Ltd. Service Division

CODE NO.	BOOKLET TYPE	13Z4P601
	MICRO-FICHE	13Z4P6EA/FA
PARTS CATALOGUE NEWS	GXV160UH2	
NEWS NO.	036	

PARTS CATALOGUE - CORRECTED

Printed in Japan

Block No.	Ref. No.	Note	Part No.	Description	Reqd. QTY GXV 160 UH2	Serial No.	Parts catalogue code
E-28			LABEL/TOOL				

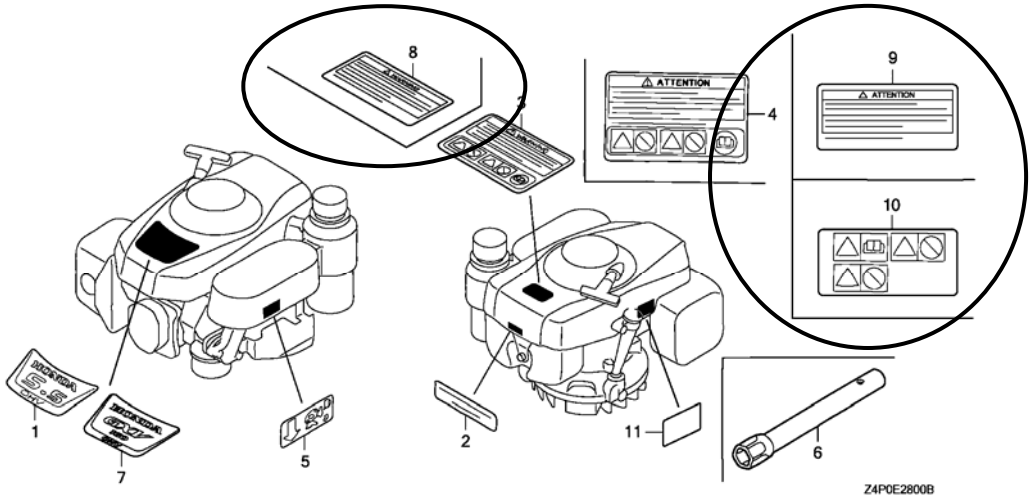

NOTE A:PART NO.CHANGE D:NEWLY PROVIDED E:PART NO.DELETION K:REQUIRED NO.CORRECTION L:APPLICATION SERIAL NO.CORRECTION
T:APPLICATION CORRECTION Z:REMARKS CHANGE

BOOKNo.:13Z4P601

Block No.	Ref. No.	Note	Part No.	Description	Reqd.QTY GXV 160 UH2	Serial No.		Parts catalogue code
E-28	3	T	87516-Z4N-000	MARK, OPERATOR CAUTION (ENGLISH)(MADE IN CHINA)	1	-------	1133623	A1AS, A1S, A1SA, A1T, A12, A14, N1, N1AH, N1F, N1F1, N1MH, N12, N15 N4, N45, N5AH, N5M, N55, SFL, SFL1, SFL2, SFL4, SFY, SFY1, T1AH
		L	87516-Z4N-810	MARK, OPERATOR CAUTION (PICTOGRAPH)(MADE IN CHINA)	(1)	-------	1133623	
		E	87516-Z4N-010	*PARTS NO. DELETION				
	4	L	87516-Z4N-800	MARK, OPERATOR CAUTION (FRENCH)(MADE IN CHINA)	1	-------	1133623	A1AS, A1S, A1SA, A1T, A12, A14, N1, N1AH, N1F, N1F1, N1MH, N12, N15 N4, N45, N5AH, N5M, N55, SFL, SFL1, SFL2, SFL4, SFY, SFY1, T1AH
		E	87516-Z4N-801	*PARTS NO. DELETION				
	8	D	87516-Z4N-010	MARK, OPERATOR CAUTION (ENGLISH)	1	-------	-------	A12W
					1	1133624	-------	A1AS, A1S, A1SA, A1T, A12, A14, N1, N1AH, N1F, N1F1, N1MH, N12, N15 N4, N45, N5AH, N5M, N55, SFL, SFL1, SFL2, SFL4, SFY, SFY1, T1AH
	9	D	87516-Z4N-801	MARK, OPERATOR CAUTION (FRENCH)	1	-------	-------	A12W
					1	1133624	-------	A1AS, A1S, A1SA, A1T, A12, A14, N1, N1AH, N1F, N1F1, N1MH, N12, N15 N4, N45, N5AH, N5M, N55, SFL, SFL1, SFL2, SFL4, SFY, SFY1, T1AH
	10	D	87519-Z4N-000	MARK, OPERATOR CAUTION (PICTOGRAPH)	1	1133624		
	11	D	87539-Z0J-000	MARK, EX. CAUTION (ENGLISH) ..	1	-------	-------	A12W
					1	1133624	-------	A1AS, A1S, A1SA, A1T, A12, A14, N1, N1AH, N1F, N1F1, N1MH, N12, N15 N4, N45, N5AH, N5M, N55, SFL, SFL1, SFL2, SFL4, SFY, SFY1, T1AH
		D	87539-Z0J-800	MARK, EX. CAUTION (PICTOGRAPH)	1	1133624	-------	A1AS, A1T, A12, N1, N1AH, N1MH, N12, N4, N5AH, SFL, SFL2, T1AH
		D	87539-Z0J-810	MARK, EX. CAUTION (FRENCH) ...	1	-------	-------	A12W
					1	1133624	-------	A1AS, A1S, A1SA, A1T, A12, A14, N1, N1AH, N1F, N1F1, N1MH, N12, N15 N4, N45, N5AH, N5M, N55, SFL, SFL1, SFL2, SFL4, SFY, SFY1, T1AH

NOTE A:PART NO.CHANGE D:NEWLY PROVIDED E:PART NO.DELETION K:REQUIRED NO.CORRECTION L:APPLICATION SERIAL NO.CORRECTION
T:APPLICATION CORRECTION Z:REMARKS CHANGE

October 03, 2009

HONDA POWER PRODUCTS

PARTS CATALOGUE NEWS

Honda Motor Co., Ltd. Service Division

CODE NO.	BOOKLET TYPE	13Z4P601
	MICRO-FICHE	13Z4P6EA/FA
PARTS CATALOGUE NEWS	GXV160UH2	
NEWS NO.	037	

Printed in Japan

GXV160UH2-N1F2 type sales information

NOTE: This Parts Catalogue News explains only the parts of the different model that are produced to conform to addition of the GXV160UH2-N1F2 type.
As for the parts not listed on this Parts Catalogue News, use the parts of the GXV160UH2-N1F type.

• Models, parts catalogue codes and applicable serial numbers

Model	Type		Parts catalogue type	Applicable engine serial No.	Applicable carburetor identification No.
GXV160UH2	N1F	Base type	N1F	GJABH-1000001~	BE66J A,BE66N A
	N1F2	Additional type	N1F2		BE66N A

• Features of each type

		Base type	Additional type
Specifications	Model	GXV160UH2	
	Type	N1F	N1F2
Crankshaft	22.2mm ø Straight	●	●
	25.4mm ø Straight (Flat key-way)		
	25.4mm ø Straight		
	20mm ø Stepped thread		
	5/8" Stepped thread		
	M8 Tapered		
	25mm ø Straight		
Flywheel brake			

BOOKNo.:13Z4P601

Block No.	Ref. No.	Part No.	Description	Reqd.QTY GXV 160 UH2	Base Part No.	Parts catalogue code
E-9	6	14451-Z7E-000	PIVOT, ROCKER ARM	2	14451-ZE1-013	
E-11	1		STARTER ASSY., RECOIL (LONG ROPE)		28400-Z1V-801ZB	
			R280.....POWER RED	0		
		28400-Z1V-802ZA	*NH1*.....BLACK	1	28400-Z1V-801ZA	
	2		CASE COMP., RECOIL STARTER		28410-Z1V-003ZA	
			R280.....POWER RED	0		
	10	28461-ZE1-013	KNOB, RECOIL STARTER	1	28461-ZE1-003	
E-12	1		COVER COMP., FAN		19610-Z1V-000ZA	
			R280.....POWER RED	0		
E-14	3	16013-Z0S-B01	FLOAT SET	1	16013-Z0S-B01	
	8	16045-Z1V-G01	CHOKE SET	1	16045-Z1V-G01	
	11	16166-Z1V-801	NOZZLE, MAIN	1	16166-Z1V-801	
	21	99101-ZH8-0650	JET, MAIN, #65	(1)	99101-ZH8-0650	
		99101-ZH8-0680	JET, MAIN, #68	1	99101-ZH8-0680	
E-16	4	18320-Z1V-010	PROTECTOR COMP., MUFFLER	1	18320-Z1V-000	
E-17	4	17510-Z4P-800	TANK COMP., FUEL	1	17510-Z4P-000	
	27		RUBBER, SUPPORTER (107MM)	0	16854-ZH8-000	
E-22-1	16	46392-Z1V-003	CLAMP, HARNESS	1	46392-SC2-003	
	20	90659-Z1V-003	CLIP, HARNESS	1	90659-680-013	

BOOKNo.:13Z4P601

Block No.	Ref. No.	Part No.	Description	Reqd.QTY GXV 160 UH2	Base Part No.	Parts catalogue code

E-28 LABEL/TOOL

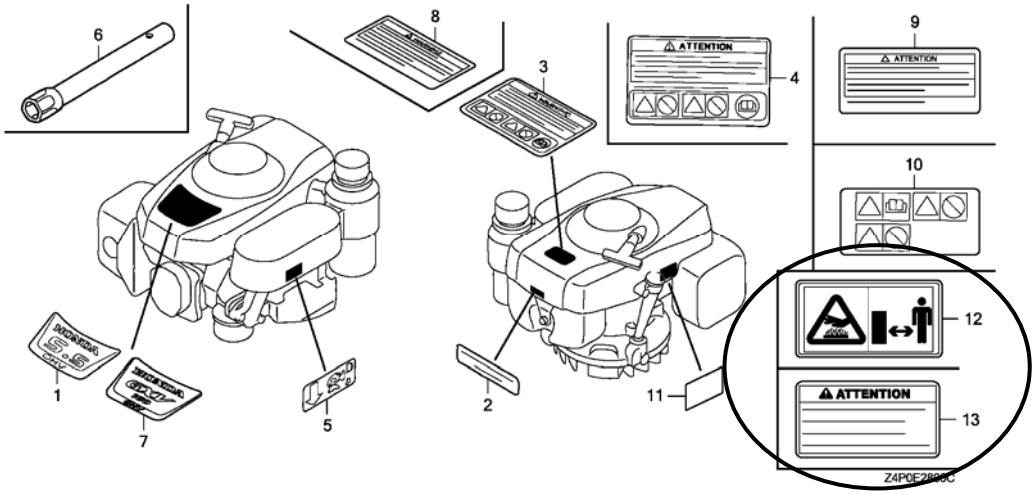

E-28	11		MARK, EX. CAUTION (FRENCH) ...	0	87539-Z0J-810
	12	87539-Z0J-800	MARK, EX. CAUTION (PICTOGRAPH)	1	
	13	87539-Z0J-810	MARK, EX. CAUTION (FRENCH) ...	1	